THERMOMETRICS
A COMMITMENT TO EXCELLENCE

AIT
Active Incar Temperature Sensor



An integrated, low-noise fan draws a greater volume of cabin air across the temperature sensor, providing a faster response as compared to traditional passive sensors. This can result in a more accurate climate control, leading to better cabin comfort. This sensor can also help improve the efficiency of the temperature control system by reducing the on / off cycles of the heating and cooling system.

Applications

- For in cabin vehicle temperature measurement for vehicles that have an automated temperature control system

Features

- Existing field proven design
- Fast Response
- Accuracy maximizes driver/passenger comfort
- Ultra-low noise, high air flow optimised system design
- Coreless Type Motor
- Small size & flexible packaging facilitates installation & service
- Low current consumption
- Long-term stability – even in extreme humidity environments
- Alternate RvT curves available
- Available with/without humidity sensor
- Electronics integrated into one assembly with the temperature sensor.
- Different geometries to meet package requirements

Amphenol
Advanced Sensors

Specifications

R @ 25°C
30.0 kΩ ±1.2%

B (0/50)
3887K ±1%

Operating Temperature Range
-40°C to 85°C

Storage Temperature Range
-40°C to 85°C

Response Time
< 10 seconds (25°C to > 85°C in OIL)

Housing Material
PP-(GF+TD)15

NTC Part Number
TC330S39FB

Weight
29.5 grams/piece

Air Flow Volume
Minimum 1.2 m/s (at 23 ±5°C, 13.5 ±0.1V), inlet

Operating Current
70.0mA Maximum (at 14.0 ±0.1V)

Rated Voltage
12.0V

Minimum Starting Voltage
9.0V MAX

Noise
38.0dB MAX (at 12.0±0.1V)

Connector
YAZAKI 7282-8663

Mating Connector
KET MG651439

Resistance and Temperature Accuracy

Temp. (°C)	Tolerance (%)	R (KOhms)	Tolerance (%)
+60	-0.73/+0.71	7.463	±2.6
+50	-0.59/+0.58	10.810	±2.2
+35	±0.39	19.590	±1.6
+25	±0.27	30.000	±1.2
+15	-0.36/+0.35	47.130	±1.7
0	-0.47/+0.46	97.710	±2.4
-15	-0.58/+0.57	216.100	-3.1/+3.2
-30	-0.69/+0.67	509.600	-4.0/+4.1

Drawing

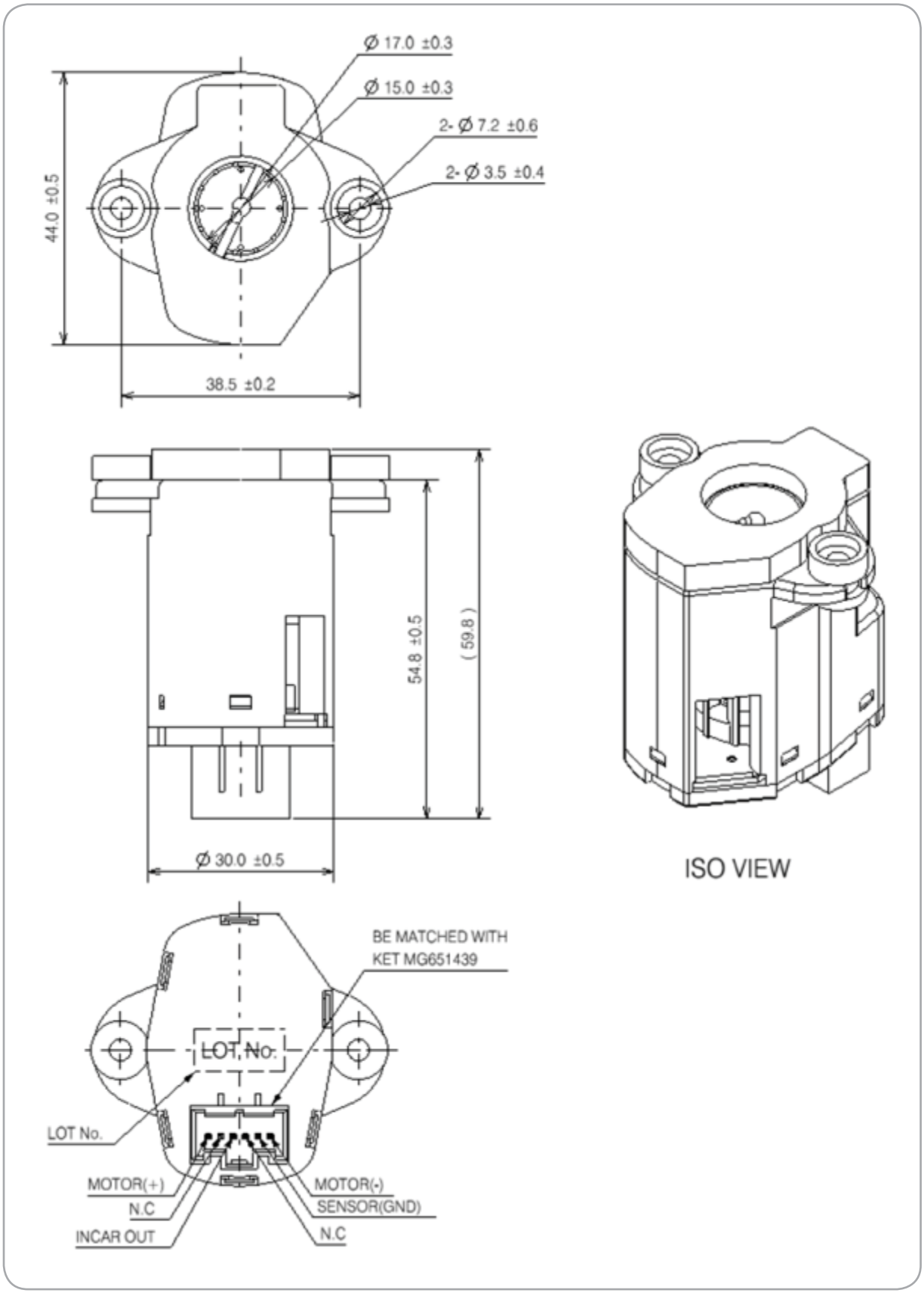
Ø 17.0 ±0.3
Ø 15.0 ±0.3
2- Ø 7.2 ±0.6
2- Ø 3.5 ±0.4
44.0 ±0.5
38.5 ±0.2
54.8 ±0.5
(59.8)
Ø 30.0 ±0.5
ISO VIEW
BE MATCHED WITH
KET MG651439
LOT No.
LOT No.
MOTOR(+)
N.C
INCAR OUT
MOTOR(-)
SENSOR(GND)
N.C

Amphenol

Advanced Sensors

www.amphenol-sensors.com

© 2014 Amphenol Corporation. All Rights Reserved. Specifications are subject to change without notice.
Other company names and product names used in this document are the registered trademarks or trademarks of their respective owners.

AAS-920-527A-03/2014