Up to PL e of EN ISO 13849-1
PNOZ s2



Safety relay for monitoring E-STOP pushbuttons and safety gates.

Approvals

	PNOZ s2
c UL us LISTED	◆
TÜV SÜD	◆
CCC	◆

Unit features

- Positive-guided relay outputs:
  - 3 safety contacts (N/O), instantaneous
  - 1 auxiliary contact (N/C), instantaneous
- Safe separation of safety contacts from all other circuits
- 1 semiconductor output
- Connection options for:
  - E-STOP pushbutton
  - Safety gate limit switch
  - Reset button
- A connector can be used to connect 1 PNOZsigma contact expander module
- Operating modes can be set via rotary switch
- LED indicator for:
- Supply voltage
- Input status, channel 1
- Input status, channel 2
- Switch status, safety contacts
- Reset circuit
- Error
- Plug-in connection terminals (either spring-loaded terminal or screw terminal)
- See order reference for unit types

Unit description

The safety relay meets the requirements of EN 60947-5-1, EN 60204-1 and VDE 0113-1 and may be used in applications with

- E-STOP pushbuttons
- Safety gates

Safety features

The relay meets the following safety requirements:

- The circuit is redundant with built-in self-monitoring.
- The safety function remains effective in the case of a component failure.
- The correct opening and closing of the safety function relays is tested automatically in each on-off cycle.
- The unit has an electronic fuse.

Block diagram

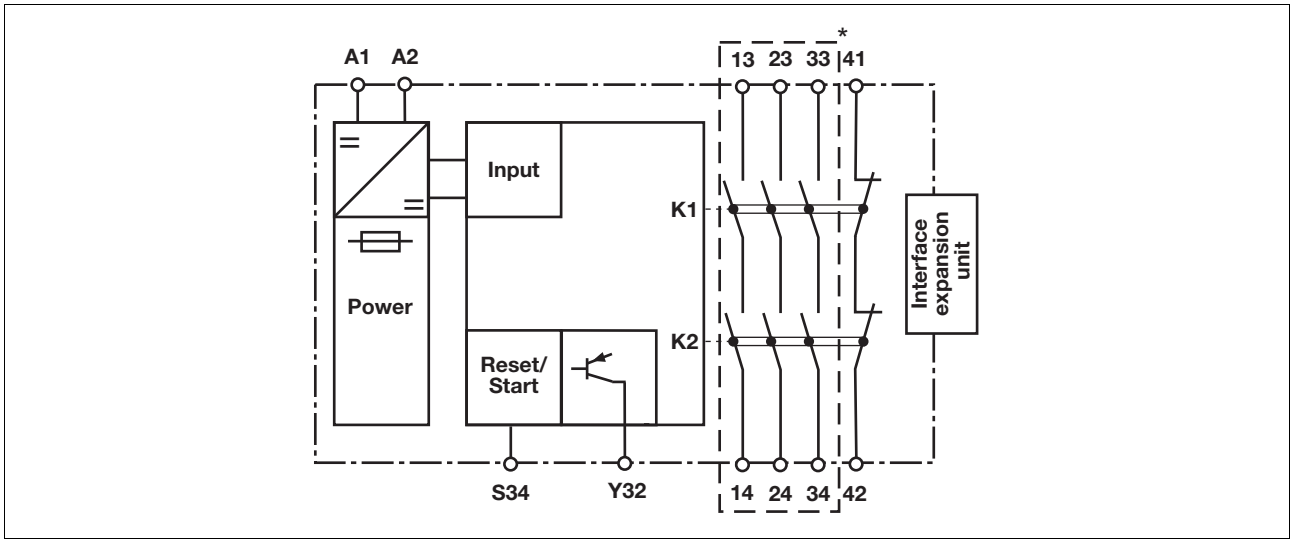

* Safe separation in accordance with EN 60947-1, 6 kV

Pilz GmbH & Co. KG, Felix-Wankel-Straße 2, 73760 Ostfildern, Germany
Telephone: +49 711 3409-0, Telefax: +49 711 3409-133, E-Mail: pilz.gmbh@pilz.de

Up to PL e of EN ISO 13849-1
PNOZ s2

Function description

- Single-channel operation: no redundancy in the input circuit, earth faults in the reset and input circuit are detected.
- Automatic start: Unit is active once the input circuit has been closed.
- Manual reset: Unit is active once the input circuit is closed and then the reset circuit is closed.
- Monitored reset with falling edge: Unit is active once
  - the input circuit is closed and then the reset circuit is closed and opened again.
  - the reset circuit is closed and then opened again once the input circuit is closed.
- Monitored reset with rising edge: Unit is active once the input circuit is closed and once the reset circuit is closed after the waiting period has elapsed (see technical details).
- Increase in the number of available instantaneous safety contacts by connecting contact expander modules or external contactors/relays; A connector can be used to connect 1 PNOZsigma contact expander module.

Timing diagram

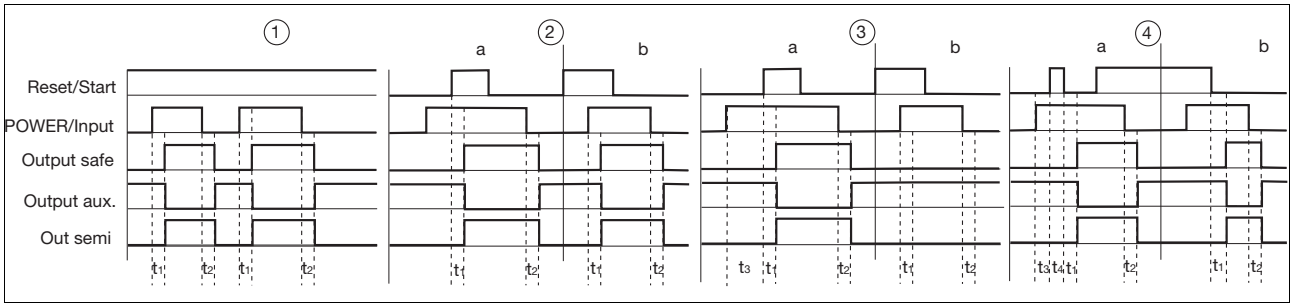

Key

- Power: Supply voltage
- Reset/Start: Reset circuit S34
- Input: Input circuits A1-A2
- Output safe: Safety contacts 13-14, 23-24, 33-34
- Output aux: Auxiliary contacts 41-42
- Out semi: Semiconductor outputY32
- ①: Automatic reset
- ②: Manual reset
- ③: Monitored reset with rising edge
- ④: Monitored reset with falling edge
- a: Input circuit closes before reset circuit
- b: Reset circuit closes before input circuit
- t_1: Switch-on delay
- t_2: Delay-on de-energisation
- t_3: Waiting period
- t_4: Waiting period reset circuit was closed

Wiring

Please note:

- Information given in the “Technical details” must be followed.
- Outputs 13-14, 23-24, 33-34 are safety contacts, output 41-42 is an auxiliary contact (e.g. for display).
- To prevent contact welding, a fuse should be connected before the output contacts (see technical details).
- Calculation of the max. cable runs I_{max} in the input circuit:

$$I_{max} = \frac{R_{lmax}}{R_l / km}$$

R_{lmax} = max. overall cable resistance (see technical details)
R_l /km = cable resistance/km

- Use copper wire that can withstand 60/75 °C.
- Sufficient fuse protection must be provided on all output contacts with capacitive and inductive loads.

Pilz GmbH & Co. KG, Felix-Wankel-Straße 2, 73760 Ostfildern, Germany
Telephone: +49 711 3409-0, Telefax: +49 711 3409-133, E-Mail: pilz.gmbh@pilz.de

Up to PL e of EN ISO 13849-1
PNOZ s2

Preparing for operation

- Supply voltage

Supply voltage	AC	DC
		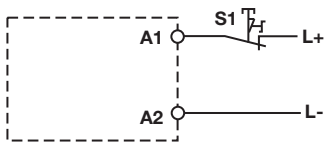

- Input circuit

Input circuit	Single-channel	Dual-channel
E-STOP **without** detection of shorts across contacts	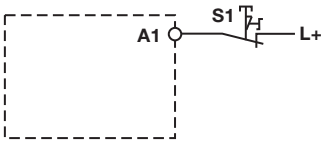	
Safety gate **without** detection of shorts across contacts	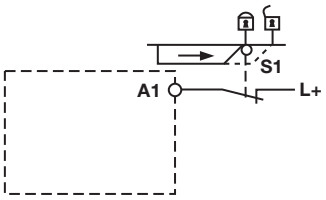	

- Reset circuit/feedback loop

Reset circuit/feedback loop	Reset circuit	Feedback circuit
Automatic reset	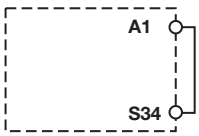	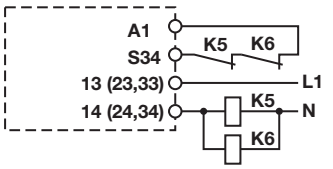
Manual/monitored reset	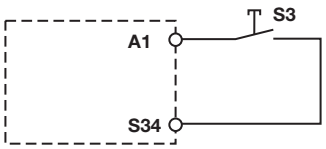	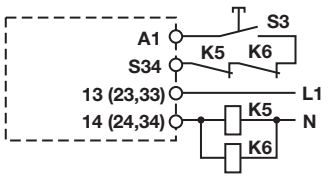

- Semiconductor output

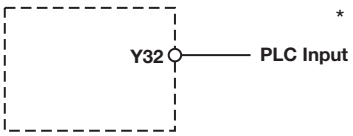

*Connect together the 0V connections on all the external power supplies

Up to PL e of EN ISO 13849-1
PNOZ s2

- Key

S1	E-STOP pushbutton
S3	Reset button
	Gate open
	Gate closed

INFORMATION
If a base unit and a contact expansion module from the PNOZsigma range are linked via the connector, no additional wiring is necessary.

Up to PL e of EN ISO 13849-1
PNOZ s2

Terminal configuration

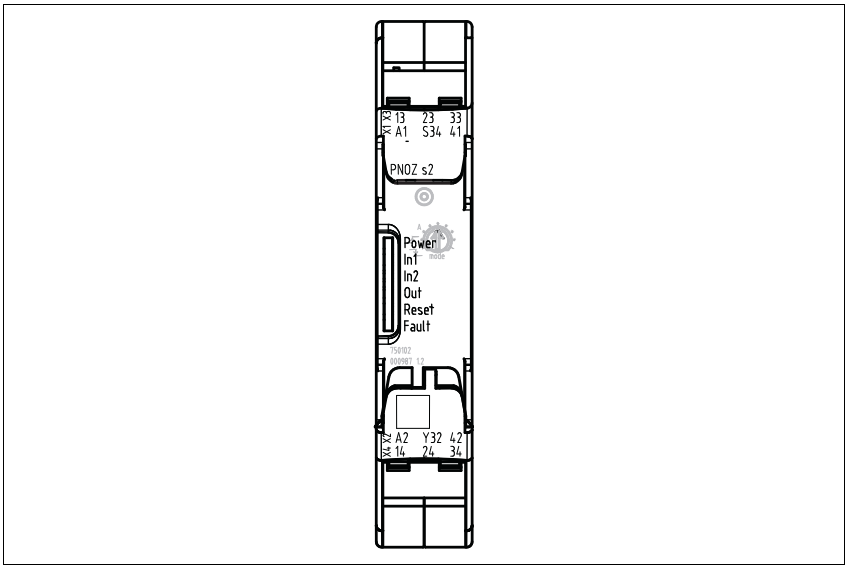

Installation

Install base unit without contact expander module:

- Ensure that the plug terminator is inserted at the side of the unit.

Connect base unit and PNOZsigma contact expander module:

- Remove the plug terminator at the side of the base unit and at the contact expander module.
- Connect the base unit and the contact expander module to the supplied connector before mounting the units to the DIN rail.

Installation in control cabinet

- The safety relay should be installed in a control cabinet with a protection type of at least IP54.
- Use the notch on the rear of the unit to attach it to a DIN rail (35 mm).
- When installed vertically: Secure the unit by using a fixing element (e.g. retaining brakket or end angle).
- Push the unit upwards or downwards before lifting it from the DIN rail.

Dimensions

*with spring-loaded terminals

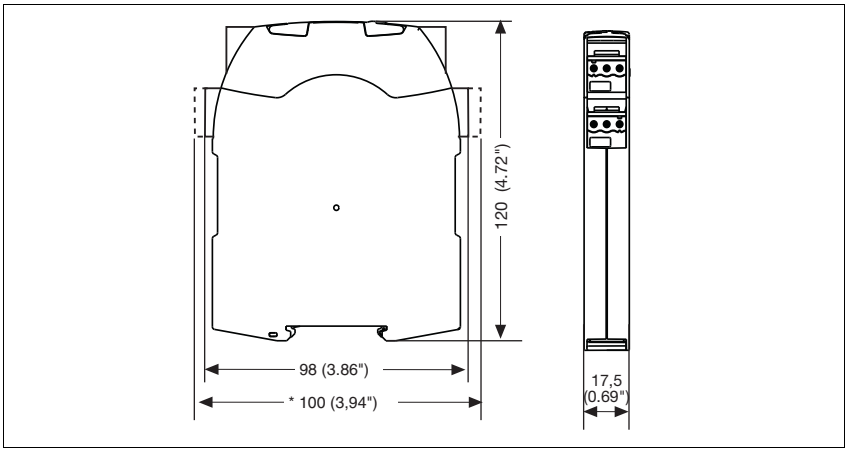

Up to PL e of EN ISO 13849-1
PNOZ s2

Notice

This data sheet is only intended for use during configuration. Please refer to the operating manual for installation and operation.

Service life graph

The service life graphs indicate the number of cycles from which failures due to wear must be expected. The wear is mainly caused by the electrical load; the mechanical load is negligible.

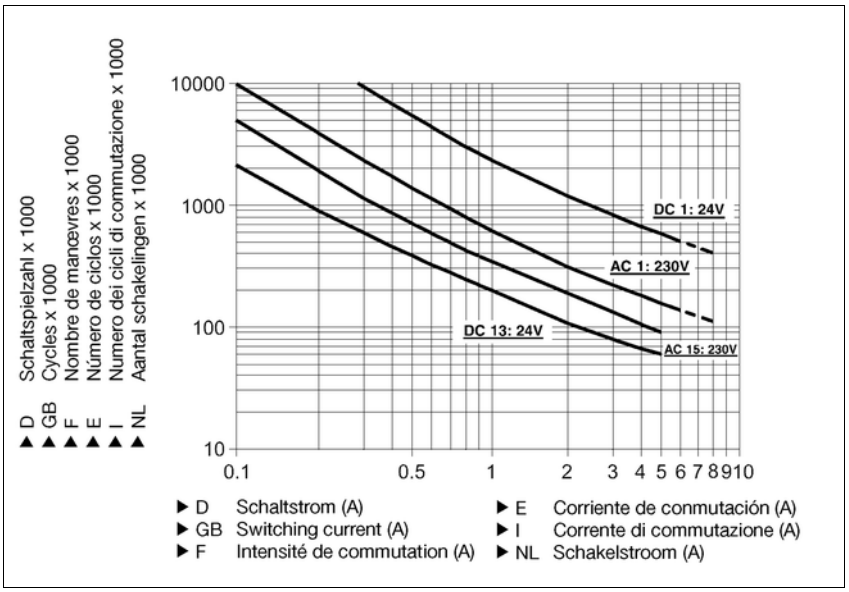

Example
- Inductive load: 0,2 A
- Utilisation category: AC15
- Contact service life: 2,000,000 cycles

Provided the application requires fewer than 2,000,000 cycles, the PFH value (see technical details) can be used in the calculation.

To increase the service life, sufficient spark suppression must be provided on all output contacts. With capacitive loads, any power surges that occur must be noted. With contactors, use freewheel diodes for spark suppression.

Technical details

Electrical data	
Supply voltage	
Supply voltage U_B DC	**24 V**
Voltage tolerance	**-15 %/+10 %**
Power consumption at U_B DC	**2.0 W**
Residual ripple DC	**20 %**
Voltage and current at	
Input circuit DC: **24.0 V**	**75.0 mA**
Reset circuit DC: **24.0 V**	**7.0 mA**
Feedback loop DC: **24.0 V**	**7.0 mA**
Number of output contacts	
Safety contacts (S) instantaneous:	**3**
Auxiliary contacts (N/C):	**1**

Up to PL e of EN ISO 13849-1
PNOZ s2

Electrical data	
Utilisation category in accordance with **EN 60947-4-1**	
Safety contacts: AC1 at **240 V**	I_{min}: **0.01 A** , I_{max}: **6.0 A** P_{max}: **1500 VA**
Safety contacts: DC1 at **24 V**	I_{min}: **0.01 A** , I_{max}: **6.0 A** P_{max}: **150 W**
Auxiliary contacts: AC1 at **240 V**	I_{min}: **0.01 A** , I_{max}: **6.0 A** P_{max}: **1500 VA**
Auxiliary contacts: DC1 at **24 V**	I_{min}: **0.01 A** , I_{max}: **6.0 A** P_{max}: **150 W**
Utilisation category in accordance with **EN 60947-5-1**	
Safety contacts: AC15 at **230 V**	I_{max}: **5.0 A**
Safety contacts: DC13 at **24 V** (6 cycles/min)	I_{max}: **5.0 A**
Auxiliary contacts: AC15 at **230 V**	I_{max}: **5.0 A**
Auxiliary contacts: DC13 at **24 V** (6 cycles/min)	I_{max}: **5.0 A**
Contact material	**AgCuNi + 0.2 µm Au**
External contact fuse protection (I_K = 1 kA) to **EN 60947-5-1**	
Blow-out fuse, quick	
Safety contacts:	**10 A**
Auxiliary contacts:	**10 A**
Blow-out fuse, slow	
Safety contacts:	**6 A**
Auxiliary contacts:	**6 A**
Circuit breaker 24 VAC/DC, characteristic B/C	
Safety contacts:	**6 A**
Auxiliary contacts:	**6 A**
Semiconductor outputs (short circuit proof)	**24.0 V** DC, **20 mA**
Max. overall cable resistance R_{lmax} input circuits, reset circuits	
single-channel at U_B DC	**30 Ohm**
Safety-related characteristic data	
PL in accordance with **EN ISO 13849-1: 2006**	**PL e** (**Cat. 4**)
Category in accordance with **EN 954-1**	**Cat. 4**
SIL CL in accordance with **EN IEC 62061**	**SIL CL 3**
PFH in accordance with **EN IEC 62061**	**2.50E-09**
SIL in accordance with **IEC 61511**	**SIL 3**
PFD in accordance with **IEC 61511**	**2.13E-05**
T_M [year] in accordance with **EN ISO 13849-1: 2006**	**20**
Times	
Switch-on delay	
with automatic reset typ.	**75 ms**
with automatic reset max.	**250 ms**
with automatic reset after power on typ.	**75 ms**
with automatic reset after power on max.	**250 ms**
with manual reset typ.	**75 ms**
with manual reset max.	**250 ms**
on monitored reset with rising edge typ.	**75 ms**
on monitored reset with rising edge max.	**250 ms**
on monitored reset with falling edge typ.	**55 ms**
on monitored reset with falling edge max.	**70 ms**
Delay-on de-energisation	
with E-STOP typ.	**50 ms**
with E-STOP max.	**70 ms**
with power failure typ.	**50 ms**
with power failure max.	**70 ms**
Recovery time at max. switching frequency 1/s	
after E-STOP	**100 ms**
after power failure	**100 ms**

Up to PL e of EN ISO 13849-1
PNOZ s2

Times	
Waiting period with a monitored reset	
with rising edge	**100 ms**
with falling edge	**110 ms**
Min. start pulse duration with a monitored reset	
with rising edge	**100 ms**
with falling edge	**100 ms**
Supply interruption before de-energisation	**10 ms**
Environmental data	
EMC	**EN 60947-5-1**, **EN 61000-6-2**, **EN 61000-6-4**
Vibration to **EN 60068-2-6**	
Frequency	**10 - 55 Hz**
Amplitude	**0.35 mm**
Climatic suitability	**EN 60068-2-78**
Airgap creepage in accordance with **EN 60947-1**	
Pollution degree	**2**
Overvoltage category	**III**
Rated insulation voltage	**250 V**
Rated impulse withstand voltage	**6.00 kV**
Ambient temperature	**-10 - 55 °C**
Storage temperature	**-40 - 85 °C**
Protection type	
Mounting (e.g. cabinet)	**IP54**
Housing	**IP40**
Terminals	**IP20**
Mechanical data	
Housing material	
Housing	**PC**
Front	**PC**
Cross section of external conductors with screw terminals	
1 core flexible	**0.25 - 2.50 mm² , 24 - 12 AWG** No. 750102
2 core, same cross section, flexible:	
with crimp connectors, without insulating sleeve	**0.25 - 1.00 mm² , 24 - 16 AWG** No. 750102
without crimp connectors or with TWIN crimp connectors	**0.20 - 1.50 mm² , 24 - 16 AWG** No. 750102
Torque setting with screw terminals	**0.50 Nm** No. 750102
Cross section of external conductors with spring-loaded terminals: Flexible with/without crimp connectors	**0.20 - 2.50 mm² , 24 - 12 AWG** No. 751102
Spring-loaded terminals: Terminal points per connection	**2** No. 751102
Stripping length	**9 mm** No. 751102
Dimensions	
Height	**102.0 mm** No. 751102 **96.0 mm** No. 750102
Width	**17.5 mm**
Depth	**120.0 mm**
Weight	**170 g**

No. stands for order number.

It is essential to consider the relay's service life graphs. The relay outputs' safety-related characteristic data is only valid if the values in the service life graphs are met.

The PFH value depends on the switching frequency and the load on the relay output.
If the service life graphs are not accessible, the stated PFH value can be used irrespective of the switching frequency and the load, as the PFH value already considers the relay's B10d value as well as the failure rates of the other components.

All the units used within a safety function must be considered when calculating the safety characteristic data.

Up to PL e of EN ISO 13849-1
PNOZ s2

INFORMATION
A safety function's SIL/PL values are **not** identical to the SIL/PL values of the units that are used and may be different. We recommend that you use the PAScal software tool to calculate the safety function's SIL/PL values.

The standards current on **2006-04** apply.

Conventional thermal current while loading several contacts

Number of contacts	I_{th} per contact at U_B DC
1	**6.00 A**
2	**6.00 A**
3	**5.00 A**

Order reference

Type	Features		Terminals	Order no.
PNOZ s2		24 VDC	With screw terminal	750 102
PNOZ s2 C		24 VDC	With spring-loaded terminal	751 102