

CE

Model Number

OMH-MLV12-HWG

Mounting bracket for series MLV12 sensors

Features

- Mounting bracket
- Simple and fast mounting

Dimensions

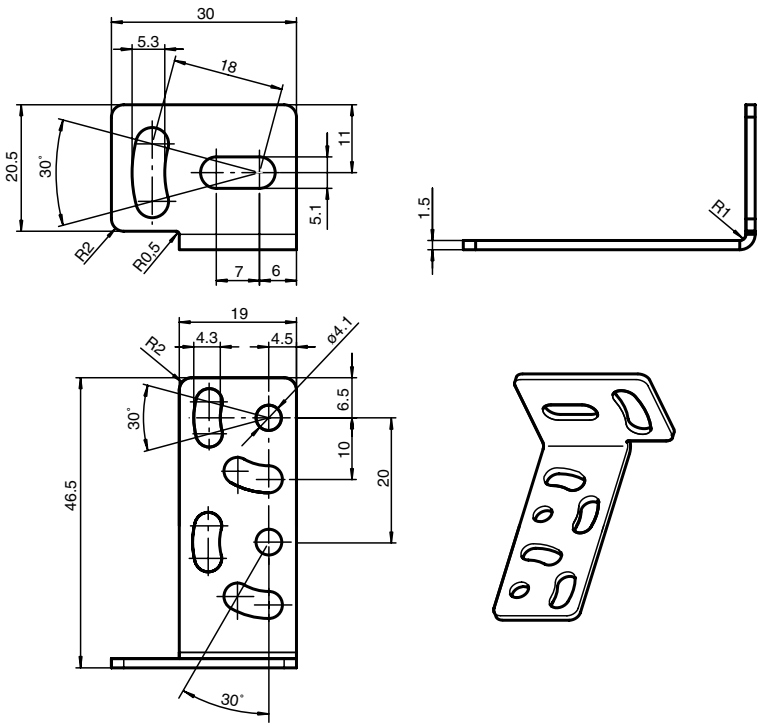

Technical data

Mechanical specifications	
Material	nickel-plated steel
Mass	approx. 15 g
Suitable series	
Series	MLV12
Safety Series	SL12, SLA12

Release date: 2005-06-22 09:49 Date of issue: 2015-01-15 115151_eng.xml