MURR ELEKTRONIK
stay connected

MOTOR SUPPRESSOR

RC, 3x575VAC/5,5kW

3× 400 V AC
3× 575 V AC
RC
Suppressors for other voltages, frequencies, and motor ratings available on request. Do not use RC motor suppressors with frequency inverters.

Link to Product

Illustration



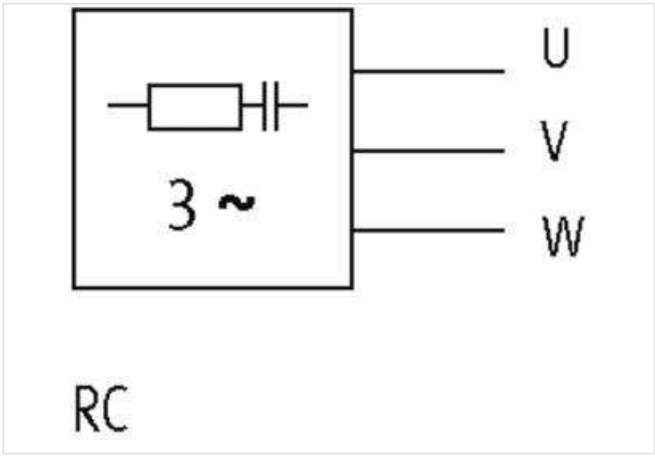

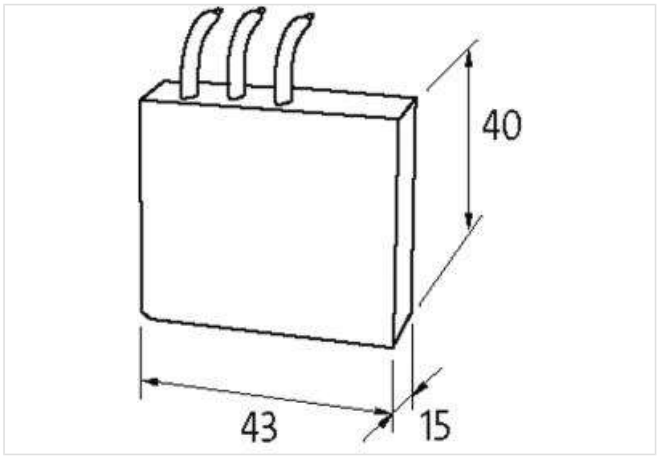

Product may differ from Image

Commercial data

ECLASS-6.0	27371013
ECLASS-6.1	27371013
ECLASS-7.0	27371013
ECLASS-8.0	27371013
ECLASS-9.0	27371013

The information in this Product-PDF has been compiled with the utmost care.
Liability for the correctness completeness and topicality of the information is restricted to gross negligence. Version: 2024-01-31

ECLASS-10.1	27371013
ECLASS-11.1	27371013
ECLASS-12.0	27371013
ETIM-5.0	EC000197
customs tariff number	85363010
GTIN	4048879015448
Packaging unit	1
Compatibility | Compatible with	
Appropriate contactors	3 RT 20 screw terminals, Siemens 3 RT 10
Electrical data | Supply	
Power frequency	50 ... 60 Hz
Electrical data | Input	
Input voltage AC	575 V
Installation | Connection	
Connection	Screw terminals SK
Device protection | Media	
Flame resistance	flame retardant
Mechanical data | Material data	
Combustibility class housing (UL94)	V-0
Material housing	Plastic
Material potting compound	2-component epoxy
Mechanical data | Mounting data	
Mounting method	geschnappt
Suitable for mounting type	Mounting rail TH35, (EN 60715)
Height	40 mm
Width	43 mm
Depth	15 mm
Environmental characteristics | Climatic	
Operating temperature min.	-20 °C
Operating temperature max.	60 °C

The information in this Product-PDF has been compiled with the utmost care.
Liability for the correctness completeness and topicality of the information is restricted to gross negligence. Version: 2024-01-31