Product data sheet

Specifications



Photoelectric sensors XU, XUY 929, BGS, laser, Sn 110 mm, 12...24 VDC, M8

XUYPSCO929L2SP

Main

Range of product	Telemecanique Photoelectric sensors XU
Series name	Application assembly
Electronic sensor type	Photo-electric sensor
Sensor name	XUY
Sensor design	Miniature
Detection system	Diffuse with background suppression
Material	Plastic
Type of output signal	Discrete
Supply circuit type	DC
Wiring technique	3-wire
Discrete output type	PNP
Discrete output function	1 NO or 1 NC programmable
Electrical connection	1 male connector M8, 4 pins
Product specific application	Monitoring of small parts on production machine Setting up of sensors
Emission	Red LED, pulsed - class 2 conforming to IEC 825-1
[Sn] nominal sensing distance	0.03…0.11 m

Complementary

Enclosure material	ABS
Pulse frequency	5 kHz
Spot diameter	<= 0.7 mm
Output type	Solid state
Status LED	Supply on/dirty: 1 LED (green) Output state: 1 LED (yellow)
[Us] rated supply voltage	12...24 V DC with reverse polarity protection
Supply voltage limits	10…30 V DC
Switching capacity in mA	100 mA (overload and short-circuit protection)
Switching frequency	1000 Hz
Maximum voltage drop	<2.4 V (closed state)

Disclaimer: This documentation is not intended as a substitute for and is not to be used for determining suitability or reliability of these products for specific user applications

Current consumption	< 25 mA no-load
Maximum delay response	3 µs
Setting-up	Using teach button or remote teaching
Net weight	0.056 kg

Environment

Product certifications	CE cULus
Ambient air temperature for operation	-20…60 °C
Ambient air temperature for storage	-20…80 °C
Immunity to ambient light	5000 lux
Vibration resistance	7 gn, amplitude = +/- 1.5 mm (f = 10…55 Hz) conforming to IEC 60068-2-6
Shock resistance	30 gn (duration = 11 ms) conforming to IEC 60068-2-27
IP degree of protection	IP67 conforming to IEC 60529

Packing Units

Unit Type of Package 1	PCE
Number of Units in Package 1	1
Package 1 Weight	22.0 g
Package 1 Height	2.5 cm
Package 1 width	6 cm
Package 1 Length	9 cm
Unit Type of Package 2	S01
Number of Units in Package 2	10
Package 2 Weight	372.0 g
Package 2 Height	15 cm
Package 2 width	15 cm
Package 2 Length	40 cm

Offer Sustainability

REACh Regulation	REACh Declaration
EU RoHS Directive	Pro-active compliance (Product out of EU RoHS legal scope) EU RoHS Declaration
Mercury free	Yes
RoHS exemption information	Yes
California proposition 65	WARNING: This product can expose you to chemicals including: Diisononyl phthalate (DINP), which is known to the State of California to cause cancer, and Di-isodecyl phthalate (DIDP), which is known to the State of California to cause birth defects or other reproductive harm. For more information go to www.P65Warnings.ca.gov

Contractual warranty

Warranty	18 months

Dimensions

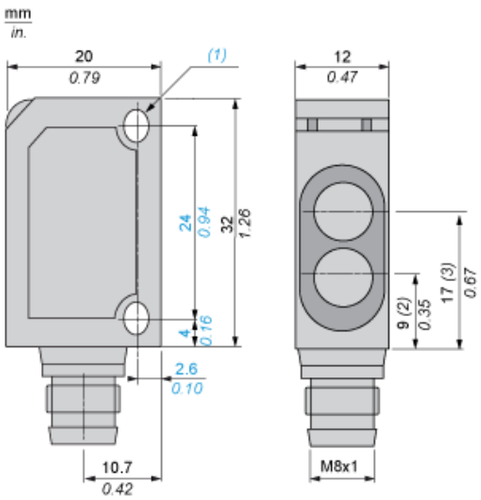

(1) 2 elongated holes Ø 3.2 x 4.2
(2) Transmitter optical axis
(3) Receiver optical axis

Wiring Schemes

M8 connector

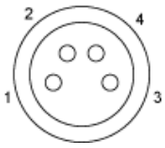

1 : Brown
2 : White
3 : Blue
4 : Black

PNP output

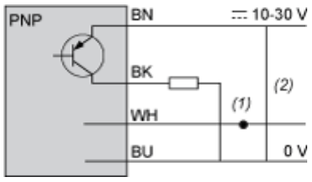

(+) BN : Brown
WH : White
(-) BU : Blue
(Output) BK : Black
(1) Connected to +: external teaching, connected to –: locking of functions
(2) Output 100 mA max.