E12017

Clean-line cylinder mounting clamp for cylinder sensors

CLAMP FOR CLEAN LINE CYL 32/36

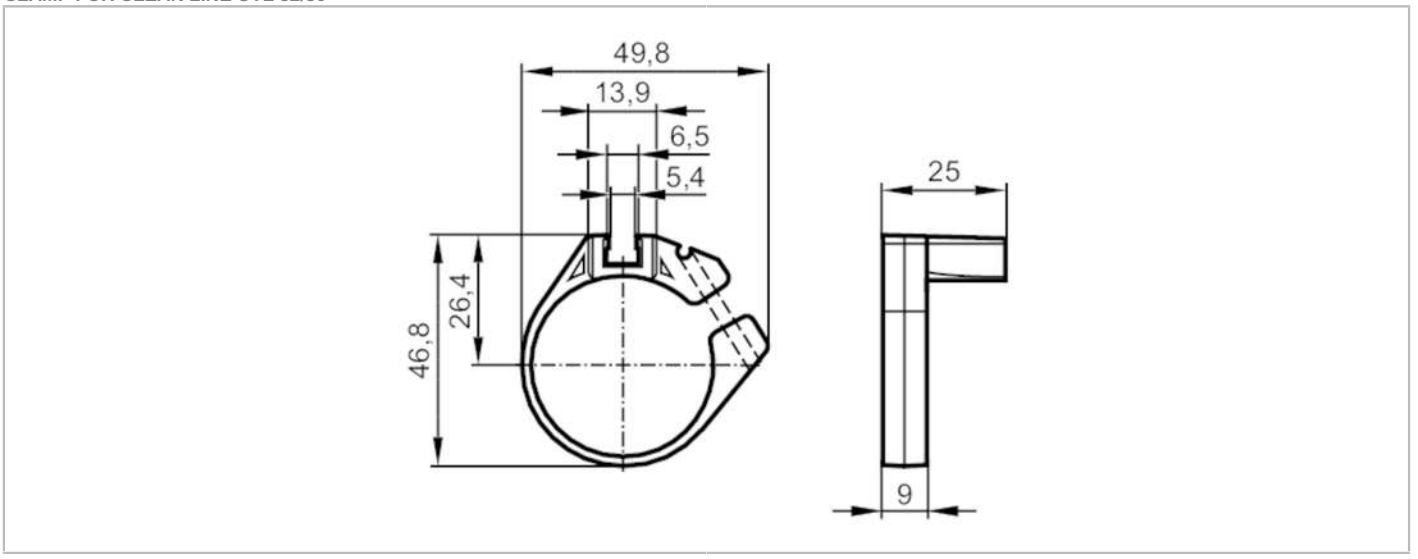

Application		
Design		for types MKT
Operating conditions		
Ambient temperature	[°C]	0...50
Mechanical data		
Weight	[g]	11.5
Materials		mounting clamp: POM; fixture: aluminium; screw: stainless steel
Tightening torque	[Nm]	0.5; (Mounting screw)
Clamping range	[mm]	35...36
Piston diameter	[mm]	32
Accessories		
Items supplied		socket head screws: 1 x SW2,5
Remarks		
Pack quantity		1 pcs.
Diagrams and graphs		
Installation		