Product data sheet
Characteristics

XMLPM01GD21F
pressure transmitter -1..1bar - 4..20mA - G1/4A male - FPM - M12



Main

Range of product	OsiSense XM
Product or component type	Electronic pressure sensors
Pressure sensor type	Pressure transmitter
Pressure sensor name	XMLP
Electrical circuit type	Control circuit
Pressure sensor size	-1...1 bar
Local display	Without
Controlled fluid	Fresh water 0...125 °C Air -15...125 °C Gas -15...125 °C Hydraulic oil -15...125 °C
Fluid connection type	G 1/4A (male) conforming to DIN 3852-E
Electrical connection	1 male connector M12 4 pins
[Us] rated supply voltage	12...24 V DC SELV, voltage limits: 7...33 V
Current consumption	< 23 mA
Type of output signal	Analogue
Analogue output function	4...20 mA, 2-wire
Quantity per set	Set of 1
Type of packing	Individual

Complementary

Pressure setting range	-1...1 bar
Maximum permissible accidental pressure	3 bar
Destruction pressure	5 bar
Materials in contact with fluid	Ceramic Stainless steel AISI 316L Fluorocarbon FPM
Operating position	Any position
Protection type	Load short-circuit Reverse polarity
Electromagnetic compatibility	1.2/50 µs shock waves immunity test conforming to EN/IEC 61000-4-5 - test level 1 kV (f = 42 Ohm) Immunity to magnetic fields conforming to EN/IEC 61000-4-8 - test level 100 A/m (f = 50 Hz) Electrical fast transient/burst immunity test conforming to EN/IEC 61000-4-4 - test level 4 kV Susceptibility to electromagnetic fields conforming to EN/IEC 61000-4-3 - test level 10 V/m (f = 80...1000 MHz) Radiated RF fields conforming to EN/IEC 61000-4-6 - test level 10 V (f = 0.15...80 MHz) Electrostatic discharge immunity test conforming to EN/IEC 61000-4-2 - test level 8 kV air, 4 kV contact
[Uimp] rated impulse withstand voltage	0.5 kV
Response time on output	<= 2 ms for 10...90 % of full scale
Measurement accuracy	+/- 0.5 % of the measuring range
Resolution	0.1 % of the measuring range
Drift of the sensitivity	+/- 0.02 % of measuring range/°K
Drift of the zero point	+/- 0.02 % of measuring range/°K
Long term stability	+/- 0.25 % of the measuring range

The information provided in this documentation contains general descriptions and/or technical characteristics of the performance of the products contained herein.
This documentation is not intended as a substitute for and is not to be used for determining suitability or reliability of these products for specific user applications.
It is the duty of any such user or integrator to perform the appropriate and complete risk analysis, evaluation and testing of the products with respect to the relevant specific application or use thereof.
Neither Schneider Electric Industries SAS nor any of its affiliates or subsidiaries shall be responsible or liable for misuse of the information contained herein.

Mechanical durability	>= 10000000 cycles
Product weight	0.075 kg
Diameter	26 mm
Length	32.3 mm

Environment

Standards	EN/IEC 61326-2-3 NSF ANSI 61
Product certifications	CE CULus RCM EAC
Ambient air temperature for operation	-30...85 °C
Ambient air temperature for storage	-50...100 °C
Vibration resistance	20 gn (f = 10...2000 Hz) conforming to EN/IEC 60068-2-6
Shock resistance	100 gn for 11 ms conforming to EN/IEC 60068-2-27
IP degree of protection	IP65 conforming to EN/IEC 60529 IP67 conforming to EN/IEC 60529 IP69K conforming to DIN 40050

Offer Sustainability

Sustainable offer status	Green Premium product
RoHS (date code: YYWW)	Compliant - since 1541 - Schneider Electric declaration of conformity Schneider Electric declaration of conformity
REACh	Reference not containing SVHC above the threshold
Product environmental profile	Available
Product end of life instructions	Need no specific recycling operations

Dimensions

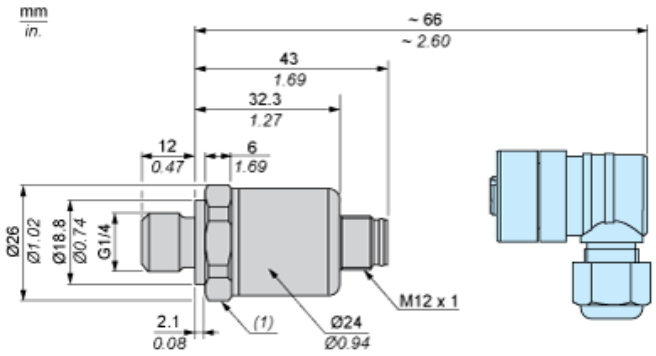

(1) SW24 tightening torque ≤ 25 N.m / 221 lb-in

Connection and Schema

Wiring Diagram

2-Wire Technique (4-20 mA)

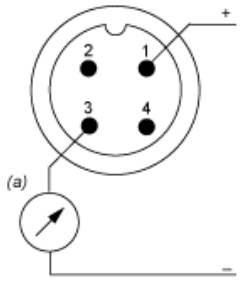

(a) I out

Performance Curves

Curves

