OGS301

Through-beam sensor transmitter

OGS-OOKG/6M

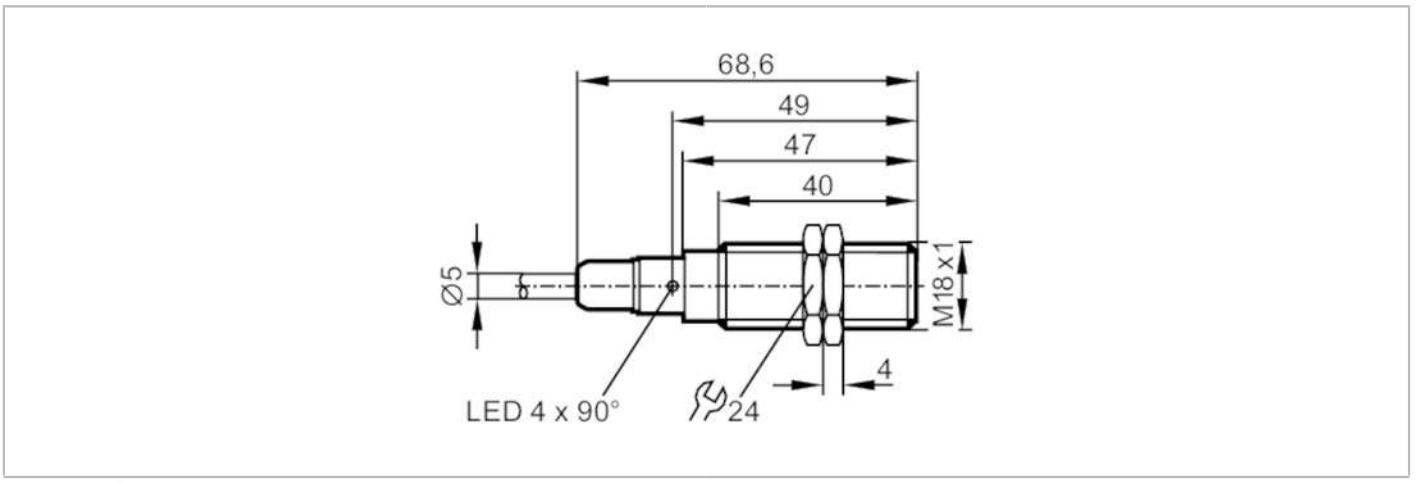

Product characteristics		
Type of light		red light
Housing		threaded type
Application		
Function principle		Through-beam sensor
Electrical data		
Operating voltage	[V]	10...36 DC
Current consumption	[mA]	15
Protection class		II
Reverse polarity protection		yes
Type of light		red light
Detection zone		
Transmitter / receiver		transmitter
Range	[m]	< 20
Range adjustable		no
Max. light spot diameter	[mm]	800
Light spot dimensions refer to		at maximum range
Operating conditions		
Ambient temperature	[°C]	-25...80
Protection		IP 65; IP 67; IP 68; IP 69K
Tests / approvals		
EMC		EN 60947-5-2
MTTF	[years]	755
Mechanical data		
Weight	[g]	245.8
Housing		threaded type
Dimensions	[mm]	M18 x 1 / L = 68.6
Thread designation		M18 x 1
Materials		housing: stainless steel (1.4404 / 316L); Sealing: EPDM

OGS301

Through-beam sensor transmitter

OGS-OOKG/6M

Lens material	PMMA	
Displays / operating elements		
Display	operation	1 x LED, green
Accessories		
Items supplied	lock nuts: 2	
Remarks		
Remarks	operating voltage "supply class 2" according to cULus	
Pack quantity	1 pcs.	
Electrical connection		

Cable: 6 m, PVC; 3 x 0.34 mm²

Connection

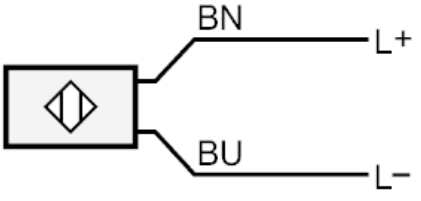

	Core colours :
BN =	brown
BU =	blue

OGS301

Through-beam sensor transmitter

OGS-OOKG/6M

Diagrams and graphs

excess gain graph

