Brand of NTN corporation

Technical data

UCPLE209

Bearing units



Grey cast housing, radial insert ball bearing with socket set screws,seal with slinger

KIT CONTENT

UC209G2, PLE209

VISUAL (S)

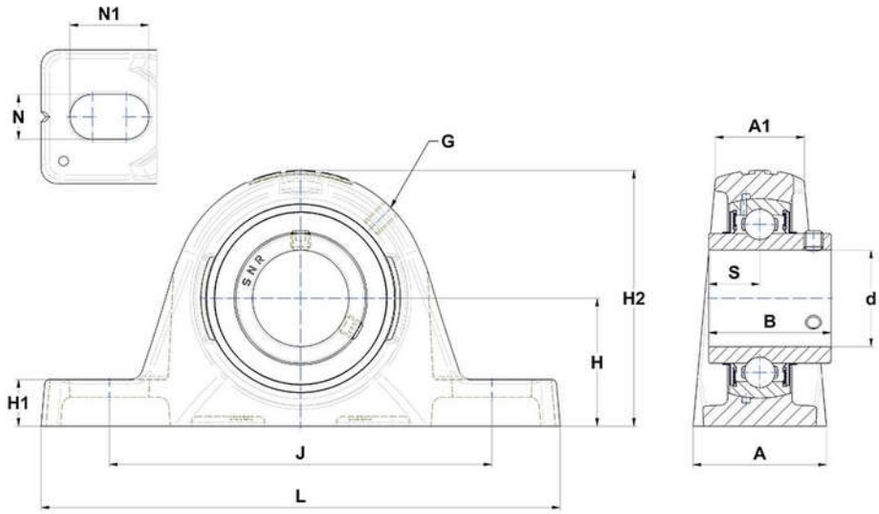

PRODUCT DEFINITION

Brand	SNR
A - Housing width	54 mm
A1 - Housing top width	35 mm
B - Width of Inner Ring	49,2 mm
d - Shaft diameter	45 mm
G - Grease fitting	M6x1

NTN Europe
1 rue des Usines · BP 2017 · 74010 Annecy Cedex · France · Tel. +33 (0)4 50 65 30 00
S.A. au capital de 322 639 919 € · RCS ANNECY B 325 821 072 · Id. Fiscale : FR 48 325 821 072
SIRET 325 821 072 00015 · Code APE 2815 Z · Code NACE 28.15

PRODUCT DEFINITION	
H - Distance mounting base to centerline spheric. seating diam.	52,4 mm
H1 - Housing foot height	18,4 mm
H2 - Housing height	106,4 mm
J - Mounting holes distance	151,5 mm
L - Housing length	197,5 mm
N - Mounting hole dimension	14 mm
N1 - Mounting hole length	24 mm
S - Distance front side/bearing centre	19 mm

PRODUCT PERFORMANCE	
C - Dynamic load rating	31850000 mN
C0 - Static load rating	20800000 mN
Operating temperature min.	253,15 °K
Operating temperature max.	373,15 °K

OTHER FEATURES	
Mass	2,38 kg
Recommended tightening torque for set screw	11.5 N-m