SM1Z1710R

SURFACE MOUNT ENCLOSURE IP65 (4X) FOR SM1R... WITH ROTARY ACTUATOR BLACK. WIDTH 100MM



Product designation				Surface mount enclosures IP65 (4X) for SM1R
Product type designation				SM1Z
Description				Surface mount enclosures IP65 (4X) for SM1R
Accessories for				SM1R…
Mechanical features				
Weight			g	245
Operations				
Mechanical life			cycles	100000
Ambient conditions				
Temperature				
	Operating temperature			
		min	°C	-25
		max	°C	+60
	Storage temperature			
		min	°C	-50
		max	°C	+80
IEC degree of protection				IP65
UL degree of protection				4X
Dimensions				

The characteristics described in this document are subject to updates or modifications at any time. The descriptions, technical and functional information, illustrations and instructions in this brochure are purely illustrative, and are consequently not contractually binding

SM1Z1710R

SURFACE MOUNT ENCLOSURE IP65 (4X) FOR SM1R... WITH ROTARY ACTUATOR BLACK. WIDTH 100MM

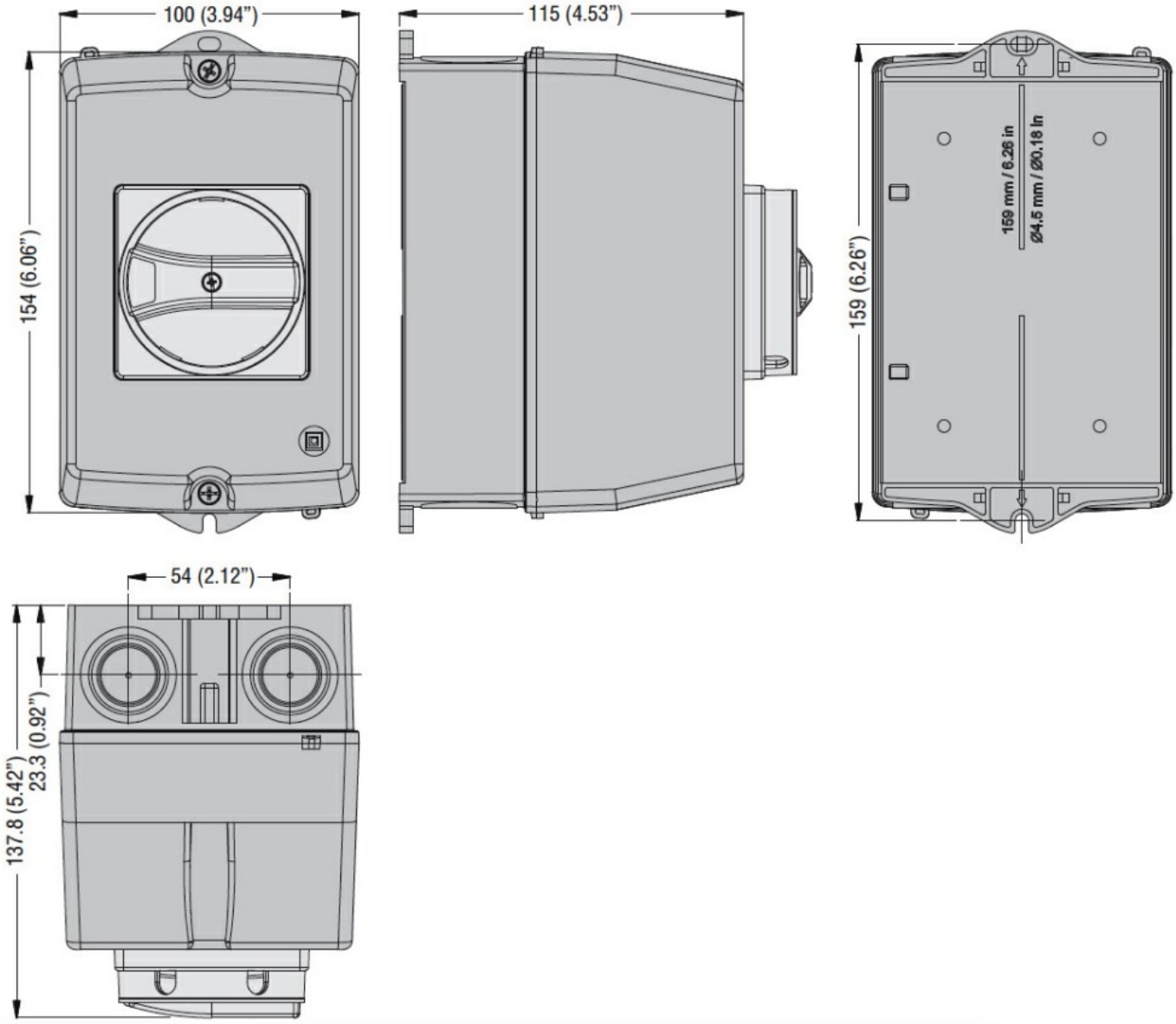

Certifications and compliance

Compliance

	CSA C22.2 n° 14
	IEC/EN 60947-1
	IEC/EN 60947-5-1
	UL508

Certificates

	cULus
	EAC

ETIM classification

The characteristics described in this document are subject to updates or modifications at any time. The descriptions, technical and functional information, illustrations and instructions in this brochure are purely illustrative, and are consequently not contractually binding