HS series

Sealed 5-way switch based miniature joystick



APEM's HS series is a single pole, MOM-OFF-MOM micro switching joystick. Numerous button styles are available and the HS series may be specified for 2-way, 4-way and 5-way operation. The HS series is available with a threaded case or may be configured for rear or drop-in panel mounting and is well suited for control grip integration.



KEY FEATURES

- ❑ **5-way with center pushbutton option**
- ❑ **Positive tactile feedback**
- ❑ **MOM-OFF-MOM action**
- ❑ **Threaded bush mount option**
- ❑ **Sealed to IP68 and IP69K**
- ❑ **Connectorized housing**



HS series

Sealed 5-way switch based miniature joystick

OPTION SELECTION

HS [ ] [ ] [ ] [ ] [ ] A

SERIES

HANDLE

0	None
1	Castle
2	Winged Hat
3	Conical
4	Finger Tip
5	Round Jog
6	Pushbutton
7	Mushroom*
8	Low Profile*

MOUNTING OPTIONS

N	None
D	Drop-in
R	Rear Mount
A	Drop-in and Rear Mount
T	Threaded Housing

TERMINATION

1	1.00mm (0.039in) Pitch Molex Connector
2	1.00mm (0.039in) Pitch Molex Connector with 10" Mating Harness

LIMITER

2	2-way
4	4-way

CONTACT

S	Silver Plated
G	Gold Plated

* = Not available with Threaded Housing (Mounting Option "T")

SPECIFICATIONS

CURRENT/VOLTAGE RATING WITH RESISTIVE LOAD

CONTACT	RATING	LIFECYCLES
Gold plated (G)	– 10mA @ 30VDC	– 200,000 operations
Silver plated (S)	– 100mA @ 30VDC	– 100,000 operations
Mechanical life	– 300,000 operations	
Insulation resistance	– Min 100MΩ (250VDC by insulation resistance meter)	
Voltage withstand	– 500VAC for 1 minute	
Contact resistance	– Max 200mΩ (by YHP4328A)	
Electrical function	– MOM-OFF-MOM	

MECHANICAL

Operating Force	– 5.56N±0.53N (1.25lbf±0.12lbf)[1]
Maximum Vertical Load	– 200N (45lbf)[1]
Maximum Horizontal Load	– 150N (33.7lbf)[1]
Lever travel	– 30° (±15°)
Mass/weight	– 17g (0.0375lb) (Option HS1DXXXA)

ENVIRONMENTAL

Sealing	– IP68, IP69K[2]
Operating temperature	– -25°C to +80°C (-13°F to +176°F)

PUSHBUTTON SWITCH SPECIFICATIONS (Option 6 Handle)

Electrical life	– 100,000 cycles
Rating	– 50 mA,12VDC
Terminal	– Brass with silver plating
Contact resistance	– 100 milliohms max.
Insulation resistance	– 100 megohms min. 500VDC
Dielectric strength	– 250VAC /1 minute
Contact arrangement	– 1 pole 1 throw
Operation force	– 1.5lbf
Stop strength	– Max 3kgf vertical static load for 15 seconds
Operating temperature	– -25°C to +70°C (-13°F to +158°F)
Storage temperature	– -30°C to +85°C (-22°F to +185°F)

TERMINATION

Manufacturer	– Molex
Manufacturer part number	– 501331-0607
Product range	– Pico-Clasp ™
Circuits	– Six
Pitch	– 1.00mm
Mating connector	– Molex 501330-0600

NOTES:

1 Force applied to the top of the castle cap.

2 All options are IP68 and IP69K rated, however Drop-in mounting does not prevent panel ingress.

Note: All values are nominal

The company reserves the right to change specifications without notice.

SPECIFICATIONS - continued

OPTIONAL MATING HARNESS[1]	
Wire type	– 28AWG 25cm PTFE
Connector	– Molex 501330-0600

NOTE:

1 The HS Series tactile toggle switch is fitted with a six terminal Molex (501331-0607) connector. A mating harness is not included, but may be specified at the time of order for an additional charge. The 4-function harness is part number 505-508. The 5-function harness, necessary for the Option 6 Handle is part number 505-509.

DIMENSIONAL DRAWINGS

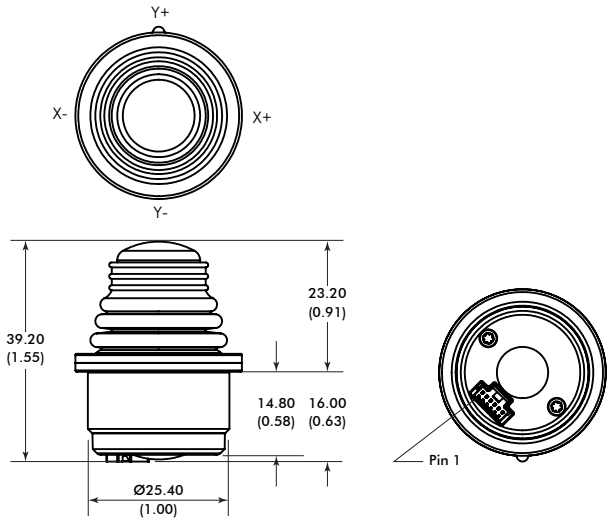

WIRING	
CONNECTOR POSITION	FUNCTION
1	Top Switch*
2	X+ Switch
3	Y+ Switch
4	X- Switch
5	Y- Switch
6	Common
	* = Optional

HANDLE OPTIONS

1. CASTLE

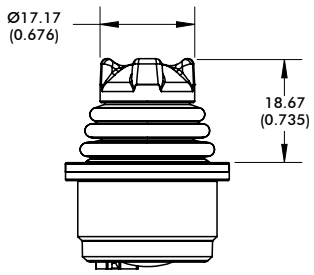

2. WINGED HAT

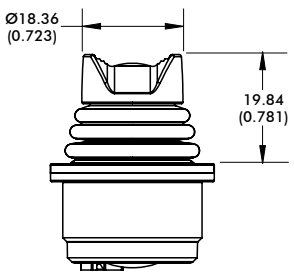

3. CONICAL

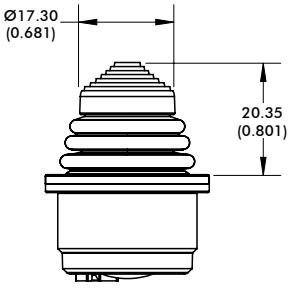

4. FINGER TIP

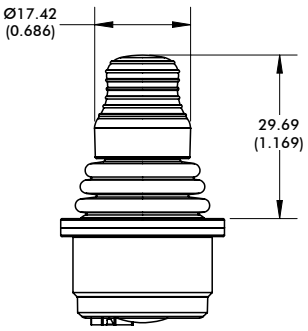

5. ROUND JOG

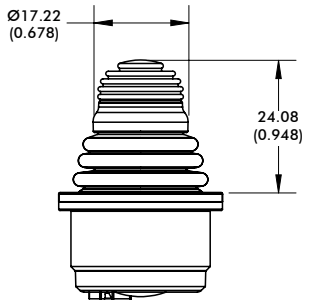

6. PUSHBUTTON

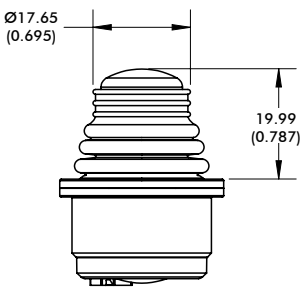

7. MUSHROOM

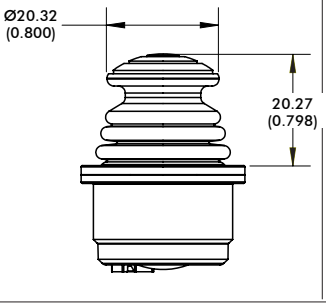

8. LOW PROFILE

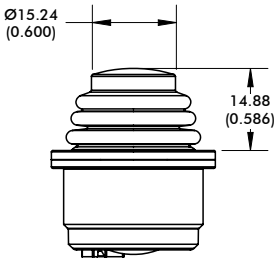

NOTE: Dimensions are in mm/(inch)

Note: The company reserves the right to change specifications without notice.

HS series

Sealed 5-way switch based miniature joystick

MOUNTING OPTIONS AND MOUNTING ACCESSORIES

PLASTIC HOUSING – DROP-IN OPTION CUTOUT DIMENSIONS

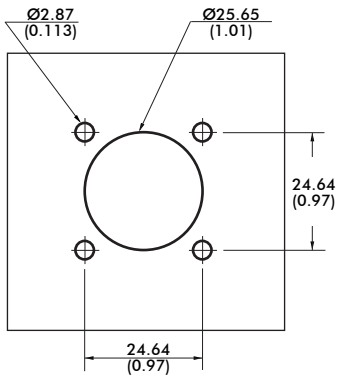





PLASTIC HOUSING – REAR MOUNT OPTION CUTOUT DIMENSIONS

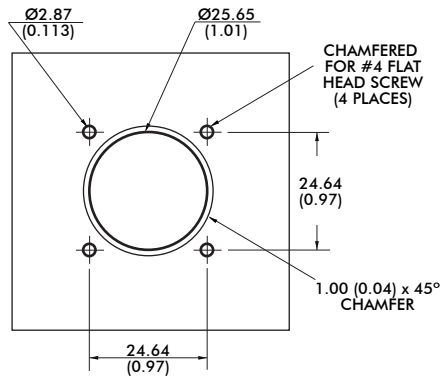





METAL THREADED HOUSING – DROP-IN OPTION CUTOUT DIMENSIONS

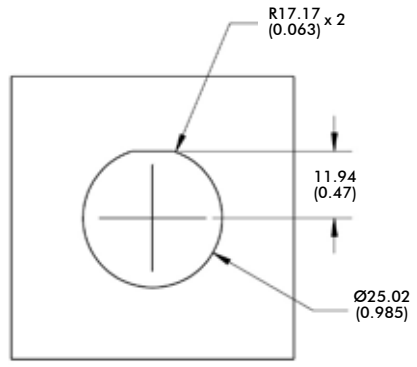





NOTES:

1 The maximum panel thickness for the Rear Mount configuration is 2.032mm (0.08in)
2 The under panel depth for the Drop-in configuration is 16.02mm/(0.631in).
3 The under panel depth for the Metal Threaded Housing configuration is 14.55mm/(0.573in).
4 Dimensions are in mm/(inch).

Note: The company reserves the right to change specifications without notice.