

Model Number

V15-W-2M-PUR

Female cordset, M12, 5-pin, PUR cable

Features

- Knurled nut suitable for tool assembly
- Immunity to vibration, with mechanical latching
- Gold plated contacts
- Degree of protection IP67 / IP68 / IP69K
- Halogen-free
- Suitable for 2-, 3- and 4-wire technology

Dimensions

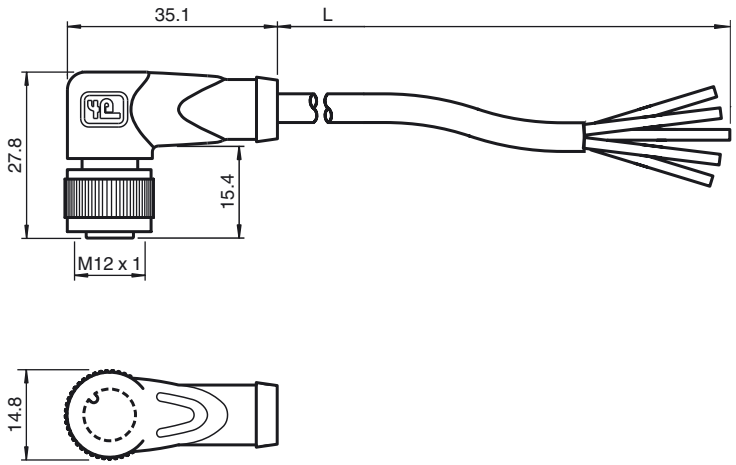

Technical data

General specifications		
Number of pins		5
Electrical specifications		
Operating voltage	U_B	max. 60 V DC
Test voltage		> 1500 V_{eff} AC
Operating current	I_B	max. 4 A
Volume resistance		< 5 mΩ
Ambient conditions		
Ambient temperature		-25 ... 100 °C (-13 ... 212 °F) for temperatures over 80 °C (176 °F) reduced elongation at tear
Pollution Degree		3
Mechanical specifications		
Contact elements		spring-loaded contact socket
Pin diameter		1 mm
Degree of protection		IP68 according to EN 60529 (in screwed state)
Material		
Contacts		CuSn / Au
Contact surface		Au
Body		TPU, black
Cable		PUR
Slotted nut		Diecast zinc
Core insolation		PP
Cable		fine-strand, flexible
Sheath diameter		Ø4.8 mm
Bending radius		> 10 x cable diameter, moving
Color		grey
Cores		5 x 0.34 mm^2
Conductor construction		19 x 0.15 mm Ø
Length	L	2 m
Flammability		
Contact material		94 V-2
Housing		94 V-2
Compliance with standards and directives		
Standard conformity		
Degree of protection		EN 60529:2000
Standards		IEC 61076-2-101:2008

Electrical connection

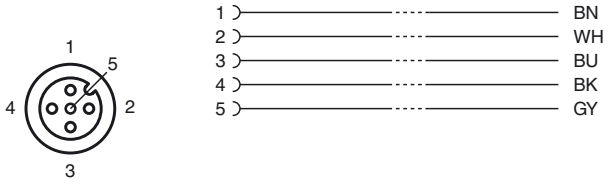

Release date: 2015-01-08 11:36 Date of issue: 2015-01-08 0219972_eng.xml