Brand of NTN corporation

Technical data

24122EAW33C3

Spherical roller bearings



Spherical roller bearing, pressed steel cage, groove and lubrication holes on outer ring

ULTAGE

VISUAL (S)

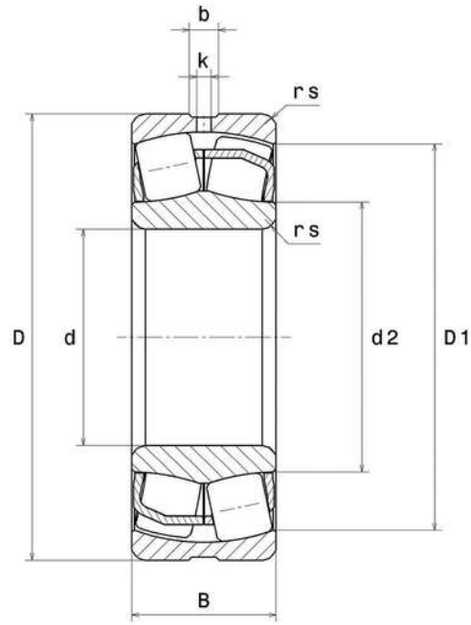

24122EAW33C3
Spherical roller bearings

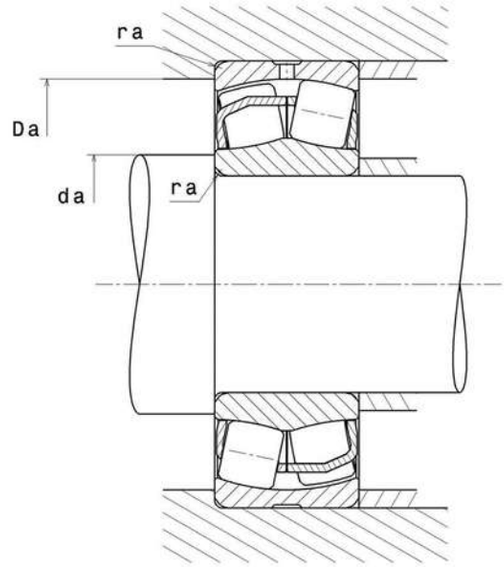

PRODUCT DEFINITION

Brand	SNR
d - Internal diameter	110 mm
D - External diameter	180 mm
B - Bearing/Inner ring width	69 mm
d2 - External diameter inner ring	121,7 mm
D1 - Inner diameter outer ring	157,2 mm
rs - Min fillet radius	2 mm
Number of lubrication holes	3
b - Groove width	8,39 mm
k - Hole diameter	4 mm
Radial clearance class	C3
Mass	6,68 kg

PRODUCT PERFORMANCE

24122EAW33C3
Spherical roller bearings

PRODUCT PERFORMANCE	
C - Dynamic load	622000000 mN
C0 - Static load	769000000 mN
Cu - Fatigue limit load	83700000 mN
e - Coefficient	0.36
Y0 - Static axial load coefficient	1.86
Y1 - Lower axial load coefficient	1.9
Y2 - Upper axial load coefficient	2.83
N ref - Reference thermal speed	13200 °/s
N lim - Mechanical Limit Speed	17400 °/s
Tmin - Min operating temperature	233,15 °K
Tmax - Max operating temperature	473,15 °K

BEARING FREQUENCIES	
BPFO - Over rolling frequency on outer ring (60 rpm)	8.667 Hz
BPFI - Over rolling frequency on inner (60 rpm)	11.333 Hz
BSF - Over rolling frequency on rolling element (60 rpm)	7.168 Hz
BRF - Rotational frequency – rolling element (60 rpm)	3.584 Hz
FTF - Rotational frequency - cage (60 rpm)	0.433 Hz

ABUTMENT	
da max - Max shoulder diameter IR	0 mm
da min - Min shoulder diameter IR	121 mm
Da max - Max shoulder diameter OR	169 mm
ra max - Max shaft & housing fillet radius	2 mm

INDUSTRY CALCUL FACTORS

Equivalent dynamic radial load

$P = X.Fr + Y.Fa$

Fa / Fr ≤ e		Fa / Fr > e	
X	Y	X	Y
1	Y1	0.67	Y2

Equivalent static radial load

$Po = Xo.Fr + Yo.Fa$

X_0	Y_0
1	Y0

The values for e, Y1, Y2 and Y0 are shown in the above table .