JUMO GmbH & Co. KG
Delivery address: Mackenrodtstraße 14
36039 Fulda, Germany
Postal address: 36035 Fulda, Germany
Phone: +49 661 6003-0
Fax: +49 661 6003-607
E-mail: mail@jumo.net
Internet: www.jumo.net

JUMO Instrument Co. Ltd.
JUMO House
Temple Bank, Riverway
Harlow, Essex CM20 2DY, UK
Phone: +44 1279 635533
Fax: +44 1279 635262
E-mail: sales@jumo.co.uk
Internet: www.jumo.co.uk

JUMO Process Control, Inc.
6733 Myers Road
East Syracuse, NY 13057, USA
Phone: 315-437-5866
1-800-554-5866
Fax: 315-437-5860
E-mail: info.us@jumo.net
Internet: www.jumousa.com

Surface-mounting double thermostat

ATH type series

Particularities

- Fluid expansion
- Microswitch
- Self-monitoring (STB/STW)
- Safety cut-out (STB/STW)
- 2 separate measuring and switching systems



ATHs-12



ATHf-170

Brief description

Thermostats are used to control and monitor thermal processes. Surface-mounting double thermostats of the ATH type series consist of two separate measuring and switching systems.

The devices are available as temperature controllers TR, temperature monitors TW, safety temperature monitors STW (STB) and safety temperature limiters STB. In the event of a malfunction, the STB switches the monitored machine line to an operationally safe status.

Surface-mounting double thermostats operate according to the fluid expansion principle, a microswitch serves as an electrical switching element.

Switching function

Temperature controller TR and temperature monitor TW

If the temperature exceeds the set point value set on the temperature probe, the microswitch will be tripped by the transmission mechanics and the current circuit opened or closed. The microswitch is reset to its original status once the set point value set is gone below (by the hysteresis).

Restart lock for the safety temperature limiter STB

If the temperature exceeds the limit value set on the temperature probe, the current circuit is opened and the microswitch mechanically locked.

The microswitch can be manually unlocked, once the dangerous temperature drops by approx. 10 % of the scale range (approx. 15% with a limit value setting > + 350 °C).

Use of the safety temperature monitor STW as a safety temperature limiter STB

Ensure that the switching circuit downstream of the thermostat complies to DIN EN 14597 and VDE 0116.

Self-monitoring for the safety temperature limiter STB and safety temperature monitor STW (STB)

If the measuring system is destroyed, i.e. if the expansion fluid escapes, the pressure in the diaphragm of the STB and STW (STB) drops and permanently opens the current circuit. Unlocking is no longer possible. If the probe has cooled down to a temperature below approx. -20 °C, the current circuit is opened, when the temperature rises above approx. -20 °C, the STB must be unlocked manually first using the re-starting button. The STW (STB) automatically restarts.

Approvals/approval marks (see Technical Data)

DIN Geprüft

The declarations of conformity can be found in the internet under:
www.jumo.net
⇒ Products
or they can be sent on request.

JUMO GmbH & Co. KG
Delivery address: Mackenrodtstraße 14
36039 Fulda, Germany
Postal address: 36035 Fulda, Germany
Phone: +49 661 6003-0
Fax: +49 661 6003-607
E-mail: mail@jumo.net
Internet: www.jumo.net

JUMO Instrument Co. Ltd.
JUMO House
Temple Bank, Riverway
Harlow, Essex CM20 2DY, UK
Phone: +44 1279 635533
Fax: +44 1279 635262
E-mail: sales@jumo.co.uk
Internet: www.jumo.co.uk

JUMO Process Control, Inc.
6733 Myers Road
East Syracuse, NY 13057, USA
Phone: 315-437-5866
1-800-554-5866
Fax: 315-437-5860
E-mail: info.us@jumo.net
Internet: www.jumousa.com

Technical Data

Control ranges and temperature probes

Switching function	Control / limit value ranges in °C	max. admissible probe temperature in °C	maximum capillary length in mm	Probe length, dimension "L" in mm Probe ø "d" = 6 mm (Standard)
fluid-filled				
TR, TW	-20 to + 50	60		141
	-10 to + 40	50		185
	0 to + 50	60		185
	0 to +100	125		107
	+20 to + 90	115		138
	+30 to +110	135		125
	+20 to +120	140	5000	106
	+60 to +130	150		135
	+20 to +150	175		88
	+50 to +200	230		101
	+50 to +250	290		73
	+50 to +300	345		63
	+50 to +350	405		53
STW and STB	+30 to +110	135		108
	+60 to +130	150		116
	+20 to +150	175	5000	77
	+50 to +250	290		64
	+50 to +300	345		55
gas-filled				
TR, TW	+20 to +400	460	1000	278
	+20 to +500	550	2000	148
	+20 to +500	550	4000	202
STW and STB	+20 to +400	460	1000	176
	+20 to +500	550	2000	127
	+20 to +500	550	4000	202

Capillary and temperature probe

Type	Scale limit value	Capillary	Temperature probe	Remarks
ATH.-. .	up to 200 °C	Copper (Cu) ø 1.5mm Material No. Cu-DHP	Copper (Cu) Material No. Cu-DHP hard soldered	–
	up to 350 °C	Copper (Cu) ø 1.5mm Material No. Cu-DHP	Stainless steel (CrNi) Material No. 1.4571 hard soldered	–
	up to 500 °C	Stainless steel (CrNi) ø 1.5mm	Stainless steel (CrNi) Material No. 1.4571 welded	–
	up to 350 °C	Stainless steel (CrNi) ø 1.5mm	Stainless steel (CrNi) Material No. 1.4571 welded	against surcharge
Capillary length	1000 mm, max. 5000 mm as standard			
minimum bending radius of the capillary	5 mm			

Electrical data

Switching element	TR, TW, STW (STB)	STB (-70)	STB (-70/574)
	Microswitch with change-over contact	Microswitch with N/C contact and restart lock	Microswitch with N/C contact, restart lock and additional signal contact
max. contact rating	AC 230 V +10%, 10 (2) A, cos φ = 1 (0.6), DC 230 V +10%, 0.25A		
	with hysteresis 1.5% and 2% AC 230 V +10%, 6 (1.2) A, cos φ = 1 (0.6)	–	–
	Microswitch gold-plated, extra code /702* (*only with hysteresis 3%, 5%, and 7%) AC / DC 24 V, 0.1 A, contact resistance 2.5 to10 mΩ		–
Contact reliability	To ensure high switching reliability, we recommend a minimum load of:		
	with silver contacts: AC / DC = 24 V, 100 mA		with gold-plated contacts (briefly "702": AC / DC = 10 V, 5 mA

JUMO GmbH & Co. KG
Delivery address: Mackenrodtstraße 14
36039 Fulda, Germany
Postal address: 36035 Fulda, Germany
Phone: +49 661 6003-0
Fax: +49 661 6003-607
E-mail: mail@jumo.net
Internet: www.jumo.net

JUMO Instrument Co. Ltd.
JUMO House
Temple Bank, Riverway
Harlow, Essex CM20 2DY, UK
Phone: +44 1279 635533
Fax: +44 1279 635262
E-mail: sales@jumo.co.uk
Internet: www.jumo.co.uk

JUMO Process Control, Inc.
6733 Myers Road
East Syracuse, NY 13057, USA
Phone: 315-437-5866
1-800-554-5866
Fax: 315-437-5860
E-mail: info.us@jumo.net
Internet: www.jumousa.com

Operating data

Hysteresis in % of the control / limit value range	Switching function	with fluid-filled measuring system		
		Rated value	**Possible actual value**	
	TR, TW	3	3 max. 4	standard
		6	6 max. 8	on request
		1.5	1 max. 2	Surcharge
		with gas-filled measuring system		
		5	4 max. 8	standard
		9	8 max. 12	on request
		2	1.5 max. 2.5	Surcharge
		with fluid-filled measuring system		
	STW (STB)	5	4 max. 6	standard
		9	8 max. 11	on request
		2	1 max. 3	Surcharge
		with gas-filled measuring system		
		7	5 max. 12	standard
		9	8 max. 16	on request
		2	1.5 max. 3	Surcharge
Switching point accuracy in % of the control/limit value range	TR, TW: in the upper third of the scale ± 1.5 %, at scale beginning ± 6 % STB, STW (STB): in the upper third of the scale +0/-5 %, at scale beginning +0/-10 %			
Ambient temperature influence based on the control/ limit value range	When the ambient temperature on the case deviates from the calibration ambient temperature 22 °C, a switch point offset occurs. Higher ambient temperatures = lower switching point Lower ambient temperature = higher switching point			
	Surface-mounting thermostats with scale limit value			
	< 200 °C		÷ 200 °C ≤ 350 °C	
	TR / TW	STB/STW (STB)	TR / TW	STB/STW (STB)
	Influence on the switch head			
	0.08 %/K	0.17 %/K	0.06 %/K	0.13 %/K
	Influence on the capillary per metre			
	0.047 %/K	0.054 %/K	0.09 %/K	0.11 %/K
admissible storage temperature	-50 to +50 °C			
admissible ambient temperature during use	max. +80 °C			
Rated position	as per DIN 16 257, NL 0 to NL 90 (different rated positions (NL) on request)			

		> 350 °C ≤ 500 °C			
		TR / TW	STB/STW (STB)		
		Influence on the switch head			
		0.14 %/K	0.12 %/K		
		Influence on the capillary per metre			
		0.04 %/K	0.03 %/K		

Case

serial	Case lid: Polycarbonate, shock resistant Case bottom part: Aluminum die casting, painted	Color: pebble gray RAL 7032 Color: anthracite gray RAL 7015
Extra code "701"	Case lid made of aluminum die casting, painted	Color: pebble gray RAL 7032
Set point value setting	TR: Switching point adjustable from the outside using the rotary knob	TW, TB, STB, STW (STB): The switching point can be adjusted by means of a screwdriver once the case lid has been removed
Protection type	EN 60 529-IP 54	
Cable inlet	As a standard: self-sealing grommet M 20 x 1.5, sealing range 8-10 mm	
Weight	approx. 0.8 kg	

Switch head fastening ATH**f**- type series . . with capillary	**serial**	Screw-connection by means of counter nut M 18 x 1 on the case stud, capillary outlet on the case stud
	Extra code	
	711	with 2 screws through the case bottom part, lateral capillary outlet on the case, lid and bottom part made of plastic
	764	Fastening flange made of steel sheet, capillary outlet on the case stud
	248	Wall stands

JUMO GmbH & Co. KG
Delivery address: Mackenrodtstraße 14
36039 Fulda, Germany
Postal address: 36035 Fulda, Germany
Phone: +49 661 6003-0
Fax: +49 661 6003-607
E-mail: mail@jumo.net
Internet: www.jumo.net

JUMO Instrument Co. Ltd.
JUMO House
Temple Bank, Riverway
Harlow, Essex CM20 2DY, UK
Phone: +44 1279 635533
Fax: +44 1279 635262
E-mail: sales@jumo.co.uk
Internet: www.jumo.co.uk

JUMO Process Control, Inc.
6733 Myers Road
East Syracuse, NY 13057, USA
Phone: 315-437-5866
1-800-554-5866
Fax: 315-437-5860
E-mail: info.us@jumo.net
Internet: www.jumousa.com

Process connection*

Type series ATH**s**- with rigid shaft	Scale limit value up to 150 °C **Sheath "20“**	Scale limit value exceeding 150 °C **Sheath "30“**
	Screw-in sleeve with screw-in spigot G 1/2 form A as per DIN 3852/2	Screw-in sleeve with screw-in journal G 1/2 form A as per DIN 3852/2 and intermediate piece, to ensure that the max. admissible ambient temperature of +80 °C is not exceeded on the case
ATH**f**- type series with capillary	**plain cylindrical probe "10“** (standard)	
	Screw-in sheath "20“ (on request)	
	Screw-in sleeve with screw-in spigot G 1/2 form A as per DIN 3852/2 and clamping piece with locking screw to lock the probe	
Material	**Sheath "20“**	**Sheath "30“**
	up to +150 °C CuZn as a standard over +150 °C CrNi	over +150 °C CrNi as a standard
Fitting length S	Standard lengths: 100, 120, 150, 200 or 300 mm (different lengths on request)	
Immersion tube Ø	D = 15 mm	

* For different process connections and thermowells refer to data sheet 606710.

Note:
Physical and toxic features of the expansion agents, which could escape in the event of a measuring system break.

Control range with scale limit value	Hazardous reactions	Fire and explosion hazard		hazardous to waters	Information about toxicology		
		Ignition temperature	Explosion limit		irritant	dangerous to health	toxic
< +200 °C	no	+ 355 °C	0.6 - 8 V%	yes	yes	[1]	no
≥ 200 °C ≤ + 350 °C	no	+ 490 °C	- -	yes	yes	[1]	no
> 350 °C ≤ + 500 °C	no	no	no	no	no	no	no

[1] There is currently no statement by the health authority concerning hazards to health in the event of short-term exposure and low concentration, e.g. measuring system break.

Approvals/approval marks

Types		Switching function	DIN registry No.	Test
with rigid shaft	with capillary			
ATH**s**-11	ATH**f**-11	TR / TR	TR / TR 896	DIN EN 14597
ATH**s**-12	ATH**f**-12	TR / TW	TR / TW 897	
ATH**s**-22	ATH**f**-22	TW / TW	TW / TW 901	
ATH**s**-120	ATH**f**-120	TR / STW (STB)	TR / STW (STB) 899 S	DIN EN 14597 Pressure device directive 97/23/EC
ATH**s**-220	ATH**f**-220	TW / STW (STB)	TW / STW (STB) 903 S	
ATH**s**-170	ATH**f**-170	TR / STB	TR / STB 900	
ATH**s**-270	ATH**f**-270	TW / STB	TW / STB 904	
ATH**s**-2020	ATH**f**-2020	STW (STB) / STW (STB)	2 x STW (STB) 905 S	
ATH**s**-2070	ATH**f**-2070	STW (STB) / STB	STW (STB) / STB 906 S	
ATH**s**-7070	ATH**f**-7070	STB / STB	STB / STB 907	

Connection diagrams

ATH-11, -12, -120
ATH-22, -220, -2020

System I and II:
with change-over contact
Switching function: TR, TW, STW

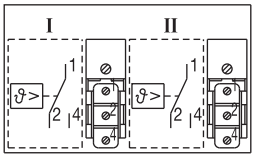

ATH-7070

System I and II:
with N/C contact
and restart lock
Switching function: STB

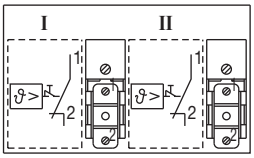

ATH-170/574, -270/574, -2070/574

System I: with change-over contact
Switching function: TR, TW, STW

System II: with N/C contact, restart lock and additional signal contact

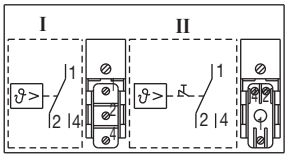

ATH-7070/574

System I and II:
with N/C contact, restart lock and additional signal contact
Switching function: STB

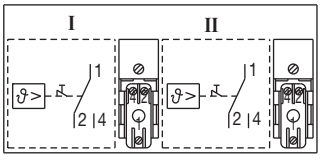

ATH-170

System I: with change-over contact
Switching function: TR, TW, STW

System II: with N/C contact and restart lock
Switching function: STB

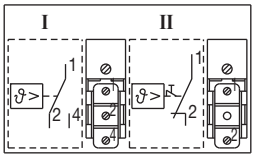

JUMO GmbH & Co. KG
Delivery address: Mackenrodtstraße 14
36039 Fulda, Germany
Postal address: 36035 Fulda, Germany
Phone: +49 661 6003-0
Fax: +49 661 6003-607
E-mail: mail@jumo.net
Internet: www.jumo.net

JUMO Instrument Co. Ltd.
JUMO House
Temple Bank, Riverway
Harlow, Essex CM20 2DY, UK
Phone: +44 1279 635533
Fax: +44 1279 635262
E-mail: sales@jumo.co.uk
Internet: www.jumo.co.uk

JUMO Process Control, Inc.
6733 Myers Road
East Syracuse, NY 13057, USA
Phone: 315-437-5866
1-800-554-5866
Fax: 315-437-5860
E-mail: info.us@jumo.net
Internet: www.jumousa.com

Dimensions Versions with rigid shaft

ATHs-11;
Process connection "20" with screw-in sheath

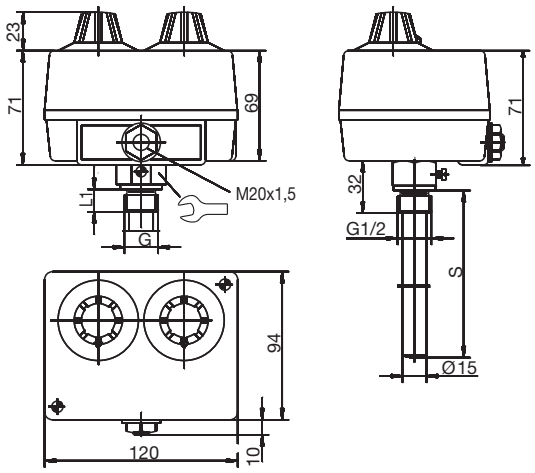

ATHs-12, ATHs-120;
Process connection "20" with screw-in sheath

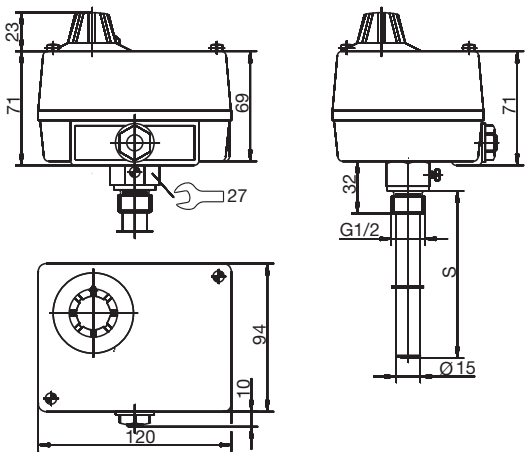

ATHs-22, ATHs-2020;
Process connection "20" with screw-in sheath

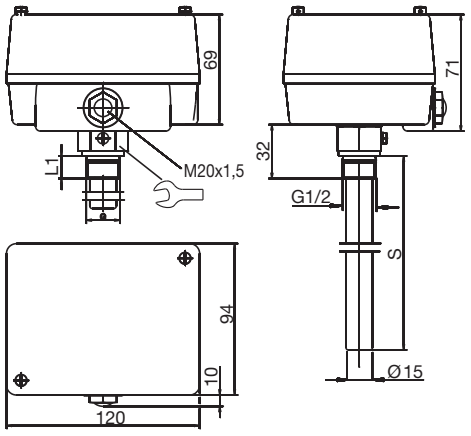

ATHs-170, ATHs-170/574;
Process connection "20" with screw-in sheath

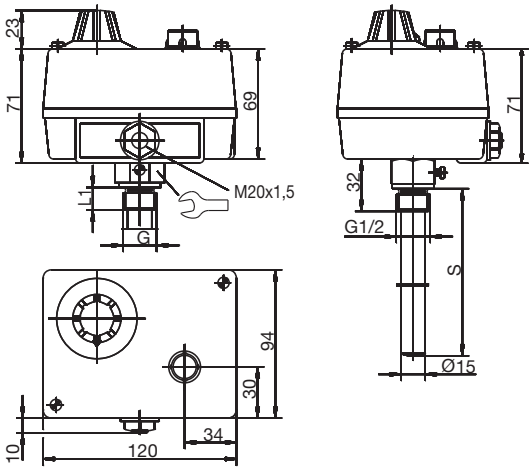

ATHs-270, ATHs-270/574, ATHs-2070, ATHs-2070/574;
Process connection "20" with screw-in sheath

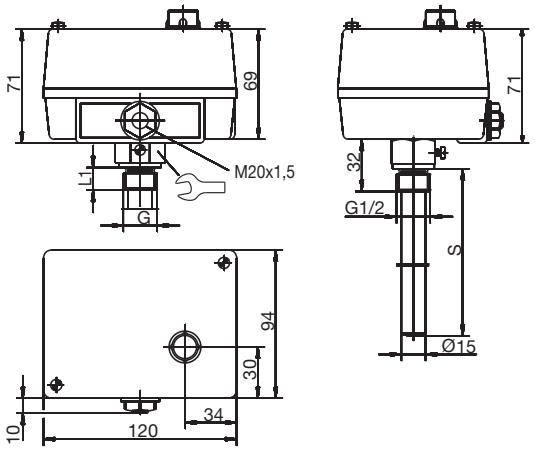

ATHs-7070, ATHs-7070/574;
Process connection "20" with screw-in sheath

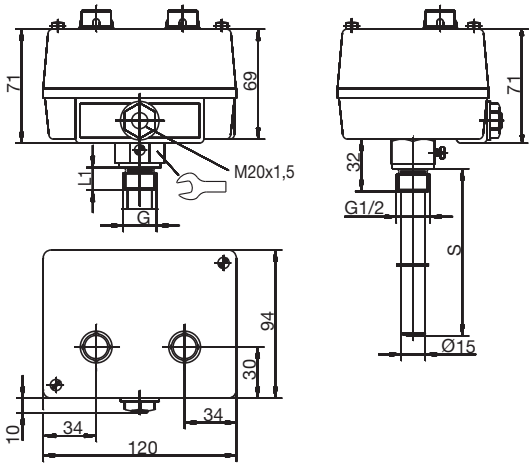

JUMO GmbH & Co. KG
Delivery address: Mackenrodtstraße 14
36039 Fulda, Germany
Postal address: 36035 Fulda, Germany
Phone: +49 661 6003-0
Fax: +49 661 6003-607
E-mail: mail@jumo.net
Internet: www.jumo.net

JUMO Instrument Co. Ltd.
JUMO House
Temple Bank, Riverway
Harlow, Essex CM20 2DY, UK
Phone: +44 1279 635533
Fax: +44 1279 635262
E-mail: sales@jumo.co.uk
Internet: www.jumo.co.uk

JUMO Process Control, Inc.
6733 Myers Road
East Syracuse, NY 13057, USA
Phone: 315-437-5866
1-800-554-5866
Fax: 315-437-5860
E-mail: info.us@jumo.net
Internet: www.jumousa.com

Dimensions Versions with rigid shaft

Process connection "30“
Screw-in sheath with intermediate piece (from 150 °C)

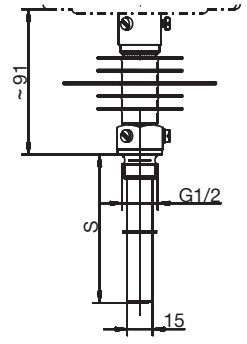

Stock versions with rigid thermowell

(Delivery within 3 working days after receipt of order)

Part no.	Type	Control / limit value range °C	Hysteresis %	Process connection Screw-in sleeve	Immersion tube Ø x length mm
60000486	ATHs-11	0 to +100	3-4	„20“ $G^1/_2$	15 x 120
60000491	ATHs-22	0 to + 50	3-4		15 x 200
60000206	ATHs-22	0 to +100	1.5		15 x 120
60001047	ATHs-22	0 to +100	3-4		15 x 120
60001555	ATHs-22	0 to +100	1.5		15 x 120 CrNi
60000205	ATHs-22	0 to +100	3-4		15 x 150
60000988	ATHs-22	0 to +100	3-4		15 x 200
60000204	ATHs-22	0 to +100	3-4		15 x 300
60000489	ATHs-22	+20 to +150	3-4		15 x 100
60000203	ATHs-22	+20 to +150	3-4		15 x 200
60003331	ATHs-22	+50 to +300	3-4	„30“ $G^1/_2$	15 x 150 CrNi
60003332	ATHs-22	+20 to +500	5		15 x 200 CrNi
60001479	ATHs-120	+20 to +150	3-4	„20“ $G^1/_2$	15 x 150
60001932	ATHs-120	+20 to +120	3-4		15 x 150
60002009	ATHs-120	+60 to +130	3-4		15 x 150
60002008	ATHs-120	+30 to +110	3-4		15 x 150
60000195	ATHs-170	+30 to +110	3-4		15 x 150
60000196	ATHs-170	+30 to +110	3-4		15 x 200
60001048	ATHs-170	+20 to +120	3-4		15 x 150
60000989	ATHs-170	+20 to +150	3-4		15 x 150
60000194	ATHs-270	+20 to +150	3-4		15 x 200

JUMO GmbH & Co. KG
Delivery address: Mackenrodtstraße 14
36039 Fulda, Germany
Postal address: 36035 Fulda, Germany
Phone: +49 661 6003-0
Fax: +49 661 6003-607
E-mail: mail@jumo.net
Internet: www.jumo.net

JUMO Instrument Co. Ltd.
JUMO House
Temple Bank, Riverway
Harlow, Essex CM20 2DY, UK
Phone: +44 1279 635533
Fax: +44 1279 635262
E-mail: sales@jumo.co.uk
Internet: www.jumo.co.uk

JUMO Process Control, Inc.
6733 Myers Road
East Syracuse, NY 13057, USA
Phone: 315-437-5866
1-800-554-5866
Fax: 315-437-5860
E-mail: info.us@jumo.net
Internet: www.jumousa.com

Dimensions Versions with capillary

ATHf-11
Process connection "10" plain cylindrical probe

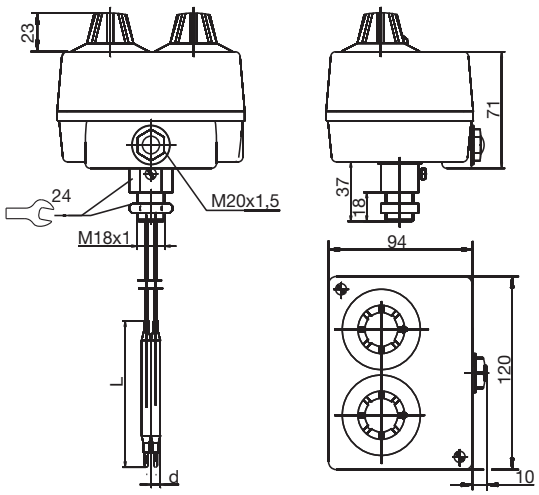

ATHf-12, ATHf-120
Process connection "10" plain cylindrical probe

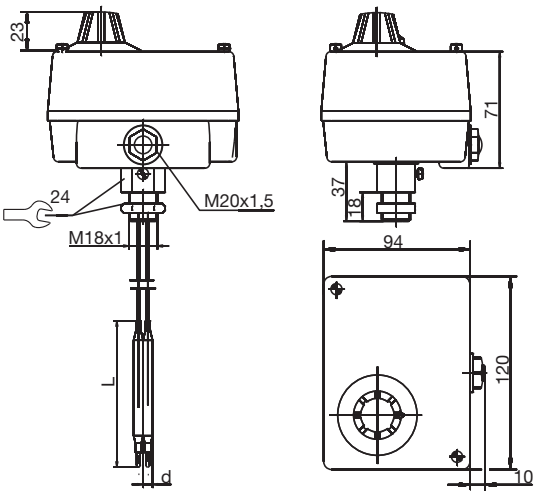

ATHf-22, ATHf-2020
Process connection "10" plain cylindrical probe

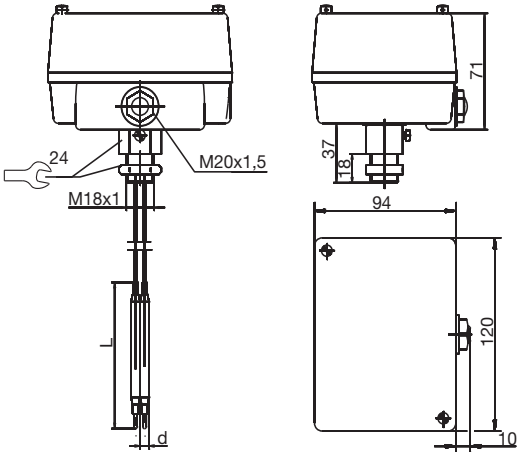

ATHf-170, ATHf-170/574
Process connection "10" plain cylindrical probe

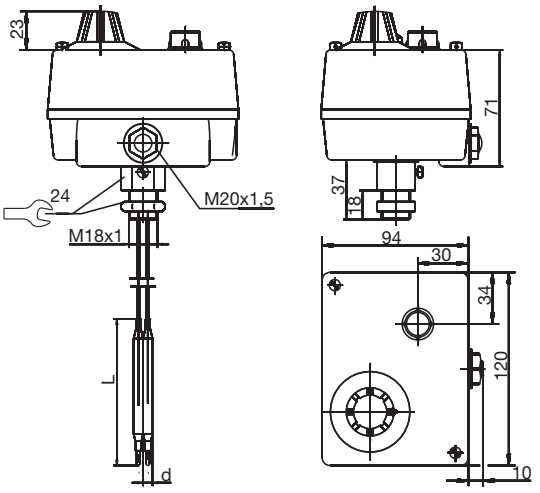

ATHf-270, ATHf-270/574, ATHf-2070, ATHf2070/574
Process connection "10" plain cylindrical probe

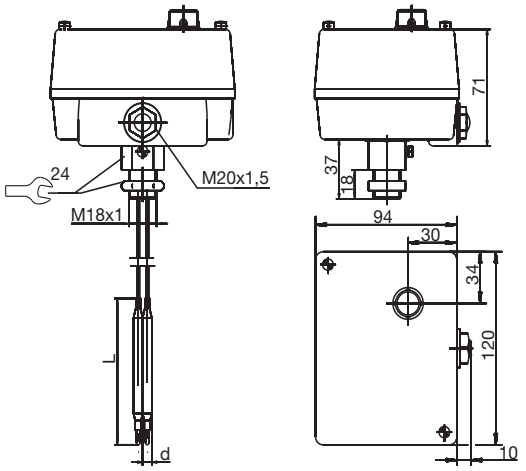

ATHf-7070, ATHf-7070/574
Process connection "10" plain cylindrical probe

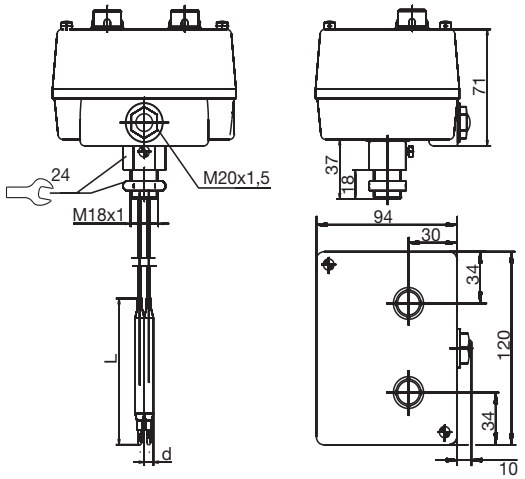

JUMO GmbH & Co. KG
Delivery address: Mackenrodtstraße 14
36039 Fulda, Germany
Postal address: 36035 Fulda, Germany
Phone: +49 661 6003-0
Fax: +49 661 6003-607
E-mail: mail@jumo.net
Internet: www.jumo.net

JUMO Instrument Co. Ltd.
JUMO House
Temple Bank, Riverway
Harlow, Essex CM20 2DY, UK
Phone: +44 1279 635533
Fax: +44 1279 635262
E-mail: sales@jumo.co.uk
Internet: www.jumo.co.uk

JUMO Process Control, Inc.
6733 Myers Road
East Syracuse, NY 13057, USA
Phone: 315-437-5866
1-800-554-5866
Fax: 315-437-5860
E-mail: info.us@jumo.net
Internet: www.jumousa.com

Stock versions with capillary

(Delivery within 3 working days after receipt of order)

Part no.	Type	Control / limit value range °C	Hysteresis %	Capillary	Process connection	Probe ø x length mm
60000986	ATHf-11	0 to +100	3-4	1000 mm	"10“ plain cylindrical probe	6 x 107
60001046	ATHf-22	0 to +100				6 x 107
60001876	ATHf-170	+30 to +110				6 x 125

Order details

Surface-mounting double thermostat, ATH type series

Order code	(1)	Basic type	
603026		Surface-mounting double thermostat, ATH type series	
	(2)	**Basic type extensions**	
0101		ATH.-11	TR/TR
0102		ATH.-12	TR/TW
0202		ATH.-22	TW/TW
0120		ATH.-120	TR/STW (STB)
0220		ATH.-220	TW/STW (STB)
0170		ATH.-170	TR/STB
0270		ATH.-270	TW/STB
2020		ATH.-2020	STW (STB)/STW (STB)
2070		ATH.-2070	STW (STB)/STB
7070		ATH.-7070	STB/STB
	(3)	**Design**	
1		ATH**s**	with rigid shaft
2		ATH**f**	with capillary
	(4)	**Control / limit value ranges 1** (°C)	
014		-20 to + 50	(only possible with TR and TW)
016		-10 to + 40	(only possible with TR and TW)
021		0 to + 50	
025		0 to +100	
041		+20 to + 90	
042		+20 to +120	
043		+20 to +150	
045		+20 to +400	
046		+20 to +500	
052		+30 to +110	
062		+50 to +200	
063		+50 to +250	
064		+50 to +300	
066		+60 to +130	
	(5)	**Control / limit value ranges 2** (°C)	
014		-20 to + 50	(only possible with TR and TW)
016		-10 to + 40	(only possible with TR and TW)
021		0 to + 50	
025		0 to +100	
041		+20 to + 90	
042		+20 to +120	
043		+20 to +150	
045		+20 to +400	
046		+20 to +500	
052		+30 to +110	
062		+50 to +200	
063		+50 to +250	
064		+50 to +300	
066		+60 to +130	

JUMO GmbH & Co. KG
Delivery address: Mackenrodtstraße 14
36039 Fulda, Germany
Postal address: 36035 Fulda, Germany
Phone: +49 661 6003-0
Fax: +49 661 6003-607
E-mail: mail@jumo.net
Internet: www.jumo.net

JUMO Instrument Co. Ltd.
JUMO House
Temple Bank, Riverway
Harlow, Essex CM20 2DY, UK
Phone: +44 1279 635533
Fax: +44 1279 635262
E-mail: sales@jumo.co.uk
Internet: www.jumo.co.uk

JUMO Process Control, Inc.
6733 Myers Road
East Syracuse, NY 13057, USA
Phone: 315-437-5866
1-800-554-5866
Fax: 315-437-5860
E-mail: info.us@jumo.net
Internet: www.jumousa.com

Order details

Surface-mounting double thermostat, ATH type series

Order code		
(6)	**Hysteresis 1**	
00	without hysteresis	(STB)
15	1.5 % of the scale range	(only for TR + TW)
20	2 % of the scale range	(only for STW (STB))
30	3 % of the scale range	(only for TR + TW)
50	5 % of the scale range	(only for TR + TW + STW (STB))
60	6 % of the scale range	(only for TR + TW)
70	7 % of the scale range	(only for STW (STB))
90	9 % of the scale range	(only for STW (STB))
(7)	**Hysteresis 2**	
00	without hysteresis	(STB)
15	1.5 % of the scale range	(only for TR + TW)
20	2 % of the scale range	(only for STW (STB))
30	3 % of the scale range	(only for TR + TW)
50	5 % of the scale range	(only for TR + TW + STW (STB))
60	6 % of the scale range	(only for TR + TW)
70	7 % of the scale range	(only for STW (STB))
90	9 % of the scale range	(only for STW (STB))
(8)	**Capillary length 1** (specifications in mm)	
0	without capillary	
1000	1000 mm	
2000	2000 mm	
3000	3000 mm	
4000	4000 mm	
5000	5000 mm	
. . . .	(Special length, specifications in plain text)	
(9)	**Capillary length 2** (specifications in mm)	
0	ATH**s** without capillary	
1000	1000 mm	
2000	2000 mm	
3000	3000 mm	
4000	4000 mm	
5000	5000 mm	
. . . .	(Special length, specifications in plain text)	
(10)	**Capillary material 1**	
00	ATH**s** without capillary	
40	Cu (Copper)	
20	CrNi (stainless steel)	
(11)	**Capillary material 2**	
00	ATH**s** without capillary	
40	Cu (Copper)	
20	CrNi (stainless steel)	

JUMO GmbH & Co. KG
Delivery address: Mackenrodtstraße 14
36039 Fulda, Germany
Postal address: 36035 Fulda, Germany
Phone: +49 661 6003-0
Fax: +49 661 6003-607
E-mail: mail@jumo.net
Internet: www.jumo.net

JUMO Instrument Co. Ltd.
JUMO House
Temple Bank, Riverway
Harlow, Essex CM20 2DY, UK
Phone: +44 1279 635533
Fax: +44 1279 635262
E-mail: sales@jumo.co.uk
Internet: www.jumo.co.uk

JUMO Process Control, Inc.
6733 Myers Road
East Syracuse, NY 13057, USA
Phone: 315-437-5866
1-800-554-5866
Fax: 315-437-5860
E-mail: info.us@jumo.net
Internet: www.jumousa.com

Order details

Surface-mounting thermostats, ATH type series

Order code	(12) Process connection [1]	
10	plain cylindrical probe (only for ATH...)	
20	Screw-in sheath	
30	Screw-in sheath with intermediate piece	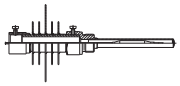

	(13) Thread of process connection [1]
00	without thread (process connection "10")
13	External thread G 1/2

	(14) Material of process connection
00	only with process connection "10"
46	CuZn (brass)
20	CrNi (stainless steel 1.4571)

	(15) Fitting length "S" (immersion tube length)
000	ATH**f** without sheath
100	100 mm
120	120 mm
150	150 mm
200	200 mm
300	300 mm
400	400 mm
. . .	(Special length, specifications in plain text)

	(16) Diameter "D" (immersion tube diameter)
00	ATH**f**- without sheath
15	15 mm

	(17) Diameter "d" (probe diameter)
6	6 mm

	(18) Extra codes [2]	
000	without extra codes	
248	„k“	Wall stands
574	„U“	Microswitch with N/C contact, restart lock and additional signal contact (only for STB)
701	„a“	case lid made of aluminum die casting (not with extra code "r")
702	„au“	Snap switch contact, gold-plated (only with hysteresis 3%, 5%, and 7% and STB with N/C contact)
711	„r“	Switch head fastening with 2 screws through the case bottom part, lateral capillary outlet on the case, lid and bottom part made of plastic
764	„b“	Fastening flange made of steel sheet, capillary outlet on the case stud

[1] For different types of connections and thermowells refer to data sheet 606710.

[2] State extra codes one after another, separated by commas.

Order code:

(1)		(2)		(3)		(4)		(5)		(6)		(7)		(8)		(9)		(10)		(11)		(12)		(13)		(14)		(15)		(16)		(17)		(18)	
603026	/	. . . .	-	.	-	. .	-	. .	-	. .	-	. .	-	.	-	. . . .	-	. .	-	. .	-	. .	-	. .	-	. .	-	. . .	-	. . .	-	.	/	. . .	/ . . .

Order example:

603026	/	0101	-	1	-	014	-	14	-	00	-	15	-	0	-	1000	-	00	-	20	-	10	-	13	-	00	-	100	-	00	-	6	/	248[2]

[2] State extra codes one after another, separated by commas.