B400SND Signalling Horn

The B400SND is a 110 dB(A) high output signalling horn suitable for a variety of general signalling applications. The B400SND reproduces the alert sound of traditional electro-mechanical equivalents but without any of the reliability issues.

In addition to the 'buzzer' type sound the unit features a further two alarm sounds. All first stage sounds have a remotely selectable second stage. The B400SND is a component of the Spectra range and can be configured with the B350 or B450 traffic light beacons for complete audio-visual signalling.

Features

- Bayonet fixing body.
- Anti-tamper locking screw.
- Stainless steel fixings.
- Multiple cable entries
- Compatible with B350 and B450 traffic light series





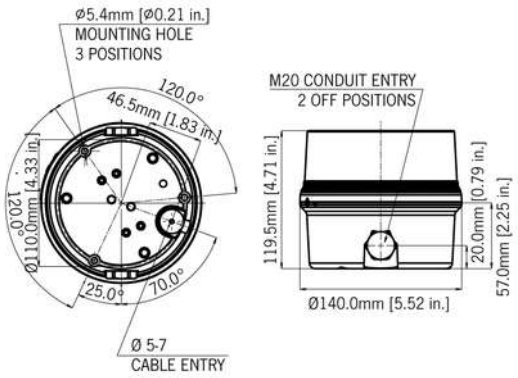

Specification

No. of tones:	3
Output:	110 dB(A) @ 1m [101dB(A) @ 10ft/3m]
Stages:	Remotely selectable second stage
Mounting:	Surface mount (wall bracket available)
Entries:	1 × 5-7mm push through grommet 2 x M20 cable entry
Dimensions:	ø140 x 120mm
Ingress protection:	IP65
Housing material:	High impact UL94 V0 (f1) PC
Terminals:	0.5 to 1.5mm²
Operating temp:	-25 to +50°C [-13° to +122°F]
Storage temp:	-40 to +70°C [-40° to +158°F]
Relative humidity:	90% at 20°C [68°F]

*SPL data +/-3dB(A). Measured at optimum voltage.

Part Codes

|_.Version:|_.Part code:| |10-30V ac/dc|B400SND030G| |40-260V ac/dc|B400SND230G|

Current Consumption

Version:	Voltage:	Current:
10-30V dc/ac	12V dc	52mA
10-30V dc/ac	24V dc	105mA
40-260V dc/ac	48V dc	42mA
10-30V dc/ac	12V ac 50/60Hz	115mA
10-30V dc/ac	24V ac 50Hz	215mA
40-260V dc/ac	48V ac 50/60Hz	68mA
40-260V dc/ac	115V dc	16mA
40-260V dc/ac	230V dc	8mA
40-260V dc/ac	115V ac 50/60Hz	36mA
40-260V dc/ac	230V ac 50/60Hz	18mA

Tone table

S 1	Description	S 2
T 2	1200/500Hz @ 1Hz - DIN / PFEER P.T.A.P.	T 1
T 3	800/1000Hz @ 7Hz Sweeping	T 2

No liability is accepted for any consequence of the use of this document. The technical specification of this unit is subject to change without notice due to our policy of continual product development. All dimensions are approximate. This unit is sold subject to our standard conditions of sale, a copy of which is available on request.