STORM Integrated Keypad and Display
Application / Engineering Manual.



This document is provided for use and guidance of engineering personnel engaged in the installation or application of STORM data entry products manufactured by Keymat Technology Ltd. Please be advised that all information, data, and illustrations contained within this document remain the exclusive property of Keymat Technology Ltd. and are provided for the express and exclusive use as described above. This document is not supported by Keymat Technology's engineering change note, revision or reissue system. Data contained within this document is subject to periodic revision, reissue or withdrawal. Whilst every effort is made to ensure the information, data and illustrations are correct at the time of publication, Keymat Technology Ltd. are not responsible for any errors or omissions contained within this document.

Overview.

Developed for use in a new generation of financial transaction terminals, this integrated **keypad, card reader and display** is suitable for use in exposed or hostile environments. The card reader and display type can be specified, as can the number of keys and keytop legends. The keypad's front panel can be easily customised to compliment the colour scheme and design of the host equipment. The Storm Integrated keypad and display can be specified with or without approved encryption electronics for applications requiring secure financial transactions.

- **Weather and vandal resistant for outdoor and unsupervised public environments.** *(also available in a lighter robust construction for less aggressive environments)*.
- **Integrated hybrid card reader-writer** (optional).
- **20 Character X 4 Line, illuminated LCD display** (optional). (Compatible Graphic or Vacuum Fluorescent displays are also available).
- **Rapid, responsive and reliable data entry.**
- **Stainless steel or polymer front plate.**
- **Easily and securely installed in vending machines, automated teller machines, public telephones, ticketing machines, car-parking control equipment etc.**
- **Fully encrypted data comms (optional).**

This document is provided for use and guidance of engineering personnel engaged in the installation or application of STORM data entry products manufactured by Keymat Technology Ltd. Please be advised that all information, data, and illustrations contained within this document remain the exclusive property of Keymat Technology Ltd. and are provided for the express and exclusive use as described above. This document is not supported by Keymat Technology's engineering change note, revision or reissue system. Data contained within this document is subject to periodic revision, reissue or withdrawal. Whilst every effort is made to ensure the information, data and illustrations are correct at the time of publication, Keymat Technology Ltd. are not responsible for any errors or omissions contained within this document.

Section 1. Options

The Storm Integrated keypad and display is a versatile device that can be configured to suit most applications. A number of cosmetic and functional options can be selected to achieve the optimum environmental or operational performance. These options can be applied to two basic chassis configurations:- The **Full Size module** or the **Reduced Footprint module**. See Illustrations below. The options marked with a ● should be considered as **"required to achieve a vandal resistant specification"**.

The following table shows the range and availability of optional features. Check the boxes ❑ to indicate your selected options.

	Full Size Module ❑		**Reduced Footprint Module ❑**	
Option ● = Required for Vandal Resistance ❑ = Optional ✔if required - = Not available	Vandal Resistant Spec	Robust Spec	Vandal Resistant Spec	Robust Spec
Resistance to water and dust. (Excluding card reader mechanism which is designed to ""drop and drain" any water, dust or foreign objects that enter the card reader slot).	IP65 Low pressure water jet	IP54 Wet wipe-down, splashes and light rain	IP65 Low pressure water jet	IP54 Wet wipe-down, splashes and light rain
Switch Contact Resistance	100 ohms (max)	100 ohms (max)	100 ohms (max)	100 ohms (max)
Silver Chromed metal keys. (See section 8. Keytop details).	●❑	-	●❑	-
Moulded polymer keys with laser engraved keytop graphics. (See section 8. Keytop details).	-	❑	-	❑
Integral keytop illumination (Silver chromed metal keytops and GFX custom keytops only). (See section 8. Keytop details).	❑	❑	❑	❑
GFX Keytops with a transparent snap on cap, enabling tiles with custom keytop characters to be encapsulated within the keytop	-	❑	-	❑
Factory fitted illuminated display module. (See section 3. Compatible display modules).	❑	❑	❑	❑
Polycarbonate display window with anti-reflective scratch resistant surface coating.	●❑	❑	●❑	❑
Partial insertion smart card reader located above the display window.	❑	❑	❑	❑
Stainless Steel closure panel for the circuit well on the back of the module.	✔	✔	✔	✔
Availability of display window refurb kit (See section 10 Ordering Details).	❑	❑	❑	❑
High energy impact protection plate located behind the keypad's switch contact pcb (See section 9. Dimensional Details).	●❑	❑	●❑	❑

This document is provided for use and guidance of engineering personnel engaged in the installation or application of STORM data entry products manufactured by Keymat Technology Ltd. Please be advised that all information, data, and illustrations contained within this document remain the exclusive property of Keymat Technology Ltd. and are provided for the express and exclusive use as described above. This document is not supported by Keymat Technology's engineering change note, revision or reissue system. Data contained within this document is subject to periodic revision, reissue or withdrawal. Whilst every effort is made to ensure the information, data and illustrations are correct at the time of publication, Keymat Technology Ltd. are not responsible for any errors or omissions contained within this document.

Section 2. Ratings and performance.

The following table shows the designed operational and performance data. Achieved performance may depend on environmental or operational conditions and mode of use.

	Full Size Module ❑		Reduced Footprint Module ❑	
Key to symbols ● = Required for Vandal Resistance - = Not applicable	Vandal Resistant Spec	Robust Spec	Vandal Resistant Spec	Robust Spec
Resistance to water and dust. (Excluding card reader mechanism which is designed to “”drop and drain” any water, dust or foreign objects that enter the card reader slot).	IP65 Low pressure water jet ●	IP54 Wet wipe-down, splashes and light rain	IP65 Low pressure water jet ●	IP54 Wet wipe-down, splashes and light rain
Operational Temperature	0°C to +70°C	0°C to +70°C	0°C to +70°C	0°C to +70°C
Impact Resistance	20 Joules via 50mm dia steel striker ●	Light impacts only	20 Joules via 50mm dia steel striker ●	Light impacts only
Switch Contact Resistance (keypad)	100 ohms (max)	100 ohms (max)	100 ohms (max)	100 ohms (max)
Switch Contact Bounce (keypad)	5ms (max)	5ms (max)	5ms (max)	5ms (max)
Insulation Resistance (keypad)	50 Mohms (min)	50 Mohms (min)	50 Mohms (min)	50 Mohms (min)
Breakdown Voltage (keypad)	500V AC (max 60 secs)	500V AC (max 60 secs)	500V AC (max 60 secs)	500V AC (max 60 secs)
Operating Voltage (keypad)	24V DC (max)	24V DC (max)	24V DC (max)	24V DC (max)
Operating Current (keypad)	50mA (max)	50mA (max)	50mA (max)	50mA (max)
Operational Life (keypad)	4 million cycles per key (min)	2 million cycles per key (min)	4 million cycles per key (min)	2 million cycles per key (min)
Keytop travel (keypad)	1.4mm nominal	1.4mm nominal	1.4mm nominal	1.4mm nominal
Key actuation force (keypad)	160gms nominal	160gms nominal	160gms nominal	160gms nominal
Connector (keypad)	0.1” pitch, gold plated square pin, male connector.	0.1” pitch, gold plated square pin, male connector.	0.1” pitch, gold plated square pin, male connector.	0.1” pitch, gold plated square pin, male connector.

This document is provided for use and guidance of engineering personnel engaged in the installation or application of STORM data entry products manufactured by Keymat Technology Ltd. Please be advised that all information, data, and illustrations contained within this document remain the exclusive property of Keymat Technology Ltd. and are provided for the express and exclusive use as described above. This document is not supported by Keymat Technology’s engineering change note, revision or reissue system. Data contained within this document is subject to periodic revision, reissue or withdrawal. Whilst every effort is made to ensure the information, data and illustrations are correct at the time of publication, Keymat Technology Ltd. are not responsible for any errors or omissions contained within this document.

Section 3. Display devices.

Many types and brands of displays can be used with the Storm Integrated keypad and display. As a general statement displays can be installed in two ways:-

1. **The display module can be secured (using thread forming M1.8 x 8mm pan head screws) directly to female bosses moulded into the underside of the** Storm Integrated keypad and display **casing. This method of installation can be achieved, at the factory, as part of the final assembly process. The female bosses on the underside of the casing are positioned to accept displays with either 93.0mm x 55.0mm or 89.9mm x 48.8mm fixing hole centres, and with a maximum depth (module thickness) of 10.0mm when measured from the mounting face.**

2. **Alternatively, if an auxiliary circuit board is to be installed (by the customer) into the underside of the** Storm Integrated keypad and display **casing, a suitable display can be fixed and connected directly to the auxiliary circuit board. This allows the auxiliary circuit and display to be manufactured and tested as a sub-assembly before final assembly into the** Storm Integrated keypad and display**.**

LCD Displays that are dimensionally compatible with the Storm Integrated keypad and display are available from most leading display manufacturers including:-

POWERTIP TECHNOLOGY CORP.
Models: PG 12232-C and PC 2004-A

HYUNDAI
Model: HC 20401

VARITRONIX
Model: MGL(S)-12032B

When specifying a display for installation in the Storm Integrated keypad and display **consideration should be given to rated operational temperature ranges quoted by the chosen manufacturer,**

This document is provided for use and guidance of engineering personnel engaged in the installation or application of STORM data entry products manufactured by Keymat Technology Ltd. Please be advised that all information, data, and illustrations contained within this document remain the exclusive property of Keymat Technology Ltd. and are provided for the express and exclusive use as described above. This document is not supported by Keymat Technology's engineering change note, revision or reissue system. Data contained within this document is subject to periodic revision, reissue or withdrawal. Whilst every effort is made to ensure the information, data and illustrations are correct at the time of publication, Keymat Technology Ltd. are not responsible for any errors or omissions contained within this document.

Section 4. Card Readers and writers.

Keymat Technology is pleased to offer the Magtek Intellistripe 65 range of full insertion card readers as a factory supplied / fitted options. These reader / writers can be specified for installation in the full size Storm Integrated keypad and display only. In addition, Keymat Technology offer the ITT Cannon and FKI partial insertion smart card readers as an optional device (for installation above the display window) in both full size and reduced footprint versions of the Storm Integrated keypad and display.

Many other types and brands of card reader/writers can be incorporated in the STORM FT, however the specification of alternative card readers may be subject to minimum order quantities or 'Non Recurring Engineering Charges'. The successful application and installation of alternative devices should be discussed and agreed with the STORM Engineering Team at the earliest stage of any project.

Card readers are secured to a profiled steel bracket attached to the Storm Integrated keypad and display terminal by four M3 locknuts.

The table below shows the applicable card reader / writer options for each Storm Integrated keypad and display **format.**

	Full Size Module ❑		**Reduced Footprint Module ❑**	
Key to symbols ❑ = Optional ✔if required - = Not available	Vandal Resistant Spec	Robust Spec	Vandal Resistant Spec	Robust Spec
MAGTEK Intellistripe 65 Range of Full Insertion Reader / Writers	❑	❑	-	-
AMPHENOL C 702-1 Pushmatic II range of full insertion card readers	❑	❑	-	-
FKI Partial Insertion Smart Card Reader / Writer	❑	❑	❑	❑
ITT Cannon Partial Insertion Smart Card Reader / Writer	❑	❑	❑	❑

Engineering Reference Data for supported card reader / writers is included (in Section 11) for reference purposes only. These documents are not supported by Keymat Technology's change note or revision control procedures. Please refer to the device manufacturer for current or additional information. Keymat Technology do not warrant or guarantee the accuracy of any ratings, data or information included in manufacturer's reference material.

This document is provided for use and guidance of engineering personnel engaged in the installation or application of STORM data entry products manufactured by Keymat Technology Ltd. Please be advised that all information, data, and illustrations contained within this document remain the exclusive property of Keymat Technology Ltd. and are provided for the express and exclusive use as described above. This document is not supported by Keymat Technology's engineering change note, revision or reissue system. Data contained within this document is subject to periodic revision, reissue or withdrawal. Whilst every effort is made to ensure the information, data and illustrations are correct at the time of publication, Keymat Technology Ltd. are not responsible for any errors or omissions contained within this document.

Section 5. Connectors and connections. (keypad and soft keys only).

The 16 key pad and the 4 adjacent soft keys (positioned beneath the display window) are configured on a 5 x 4 circuit matrix. This circuit matrix is terminated via a 13 way, 0.1" pitch, gold plated, square pin, male connector with locking ramps

The optional keytop illumination system (when specified with the unit) is also terminated via the same connector on pins 1 and 13.

The anti tamper facility is supplied to detect any seperation of the pcb from the unit. If this occurs then this will break the connection (open circuit) and may be used to activate an alarm system. Connect to PIN 2 and PIN 12 to use this facility) Rating 24 Volts dc Max

The Pinout Connection Details below shows the connector pin designation for each switch position. Switches provide a momentary contact between designated connector pins. The Connector Details below shows the orientation and position of the connector.

For details of connections to the display module and card reader (if fitted), please refer to the manufacturers information in Section 11.

Pinout Connection Details

CONTACT CONNECTIONS
(AS VIEWED FROM REAR OF KEYPAD)

13 12 11 10 9 8 7 6 5 4 3 2 1

CONNECT PIN	ROW / COLUMN
1	LED CATHODE
2	TAMPER IN
3	B
4	C
5	1
6	2
7	3
8	4
9	E
10	D
11	A
12	TAMPER OUT
13	LED ANODE

A 1 2 3 4
B
C
D
E

KEY LOCATION
(AS VIEWED FROM THE FRONT)

Connector Details

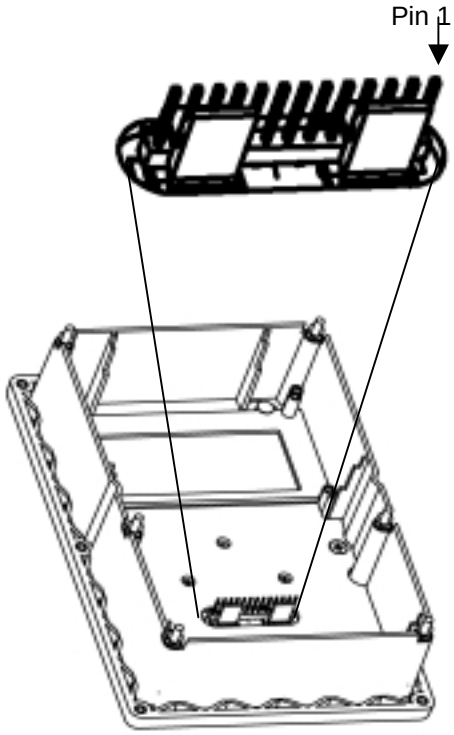

This document is provided for use and guidance of engineering personnel engaged in the installation or application of STORM data entry products manufactured by Keymat Technology Ltd. Please be advised that all information, data, and illustrations contained within this document remain the exclusive property of Keymat Technology Ltd. and are provided for the express and exclusive use as described above. This document is not supported by Keymat Technology's engineering change note, revision or reissue system. Data contained within this document is subject to periodic revision, reissue or withdrawal. Whilst every effort is made to ensure the information, data and illustrations are correct at the time of publication, Keymat Technology Ltd. are not responsible for any errors or omissions contained within this document.

Section 6. Installation in host equipment.

The Storm Integrated keypad and display can be secured into a fascia panel (or equipment casing) in two ways.

1. (Recommended for maximum tamper and vandal resistance). The Storm Integrated keypad and display can be installed from the underside of a panel, with the operational face of the unit accessible through a rectangular aperture in the panel. The Storm Integrated keypad and display is secured into place by six M3 locknuts and a retaining plate (supplied in the Mounting Kit – see Section 10. Ordering Details). Recommended dimensions and profile for the panel aperture and positions of the fixing studs are detailed in Section 9. Dimensional Details. A sealing gasket is compressed between the Storm Integrated keypad and display sealing flange and the rear surface of the fascia panel. This is necessary to achieve rated resistance to water and dust ingress.

2. The Storm Integrated keypad and display can be fixed to the outer surface of a fascia panel (or equipment casing). This is achieved by locating the unit over suitably positioned fixing holes and aperture in the panel, as shown in Section 9. The unit is then secured using six M3 screws through the panel into the threaded inserts in the case moulding. The sealing gasket is compressed between the Storm Integrated keypad and display peripheral edge and the surface of the fascia panel. This is necessary to achieve rated resistance to water and dust ingress. To calculate the length of screw required allow 4.5mm length of thread for housing plus sealing gasket.

It is recommended that the sealing gasket is replaced each time the Storm Integrated keypad and display is re-fitted to the fascia panel or host equipment. Replacements are included in the Storm Integrated keypad and display Service Kits – (see Section 10), available from STORM Data Entry stockists.

This document is provided for use and guidance of engineering personnel engaged in the installation or application of STORM data entry products manufactured by Keymat Technology Ltd. Please be advised that all information, data, and illustrations contained within this document remain the exclusive property of Keymat Technology Ltd. and are provided for the express and exclusive use as described above. This document is not supported by Keymat Technology's engineering change note, revision or reissue system. Data contained within this document is subject to periodic revision, reissue or withdrawal. Whilst every effort is made to ensure the information, data and illustrations are correct at the time of publication, Keymat Technology Ltd. are not responsible for any errors or omissions contained within this document.

Section 7. Serviceability (Vandal Resistant [VR] versions only).

The Storm Integrated keypad and display (VR) keypad is designed for use in exposed, unsupervised public environments. It is tough and weather resistant. However, deliberate attempts to vandalise the device may leave the steel front plate scarred, dented or deformed. The toughened, scratch resistant display window may also be obscured by paint or aggressive abrasives. To reduce the cost of repair or replacement resulting from deliberate vandalism some front face components have been designed to allow removal and replacement by qualified engineers. These are listed in Section 10. Ordering Details.

Section 8. Keytop Options

Style	**Construction**
Engraved metal	(Chrome plated cast)
Polymer	(Laser marked UV stable impact resistant)
Graphic	(Insertable – customisable legend tiles)
Illuminated	(Engraved metal or graphic styles)

Legends

The standard engraved metal legend set is shown below. Other key legends and styles are available – please refer to library on our web site www.keymat.com.

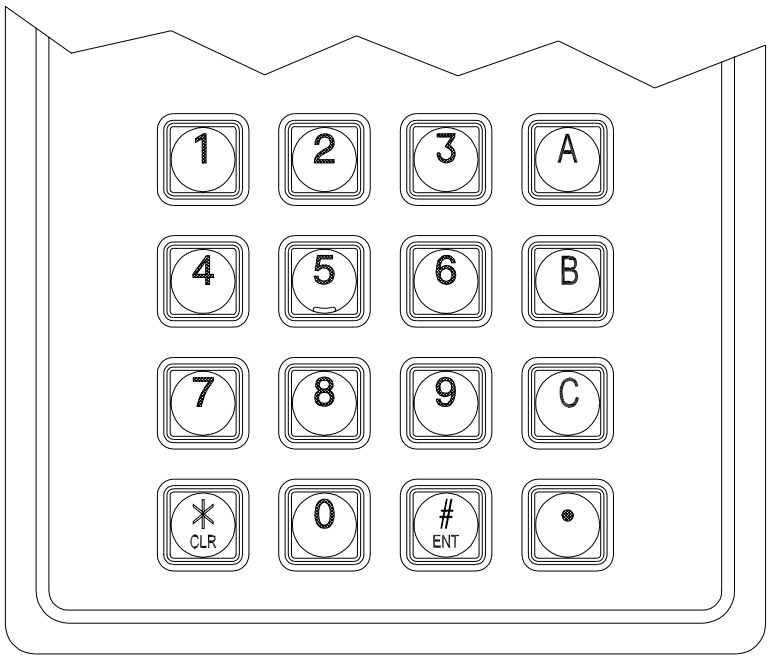

This document is provided for use and guidance of engineering personnel engaged in the installation or application of STORM data entry products manufactured by Keymat Technology Ltd. Please be advised that all information, data, and illustrations contained within this document remain the exclusive property of Keymat Technology Ltd. and are provided for the express and exclusive use as described above. This document is not supported by Keymat Technology's engineering change note, revision or reissue system. Data contained within this document is subject to periodic revision, reissue or withdrawal. Whilst every effort is made to ensure the information, data and illustrations are correct at the time of publication, Keymat Technology Ltd. are not responsible for any errors or omissions contained within this document.

Section 9. Dimensional Details. (All dimensions in millimetres)

Reduced Footprint Module (no Reader).

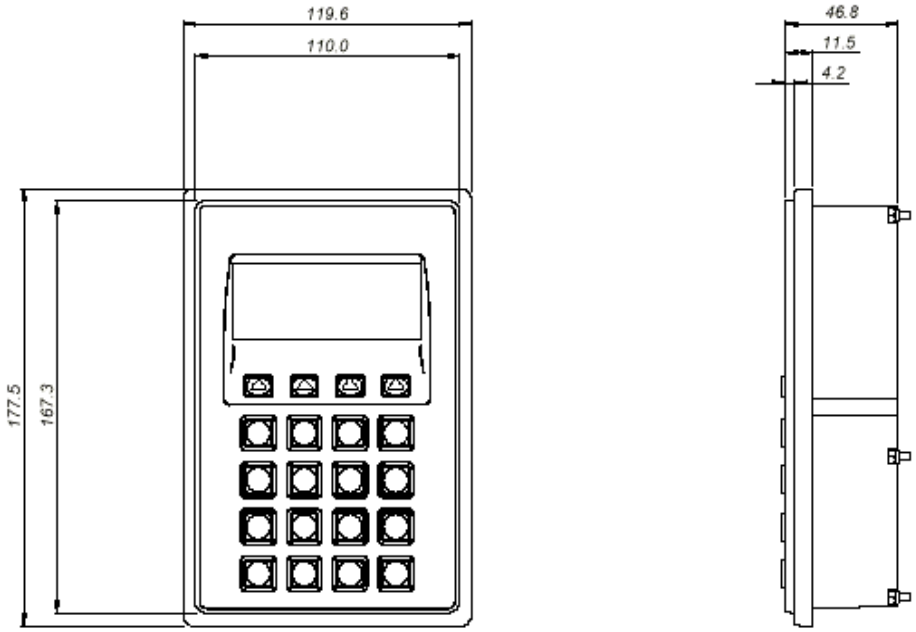

Full Size Module shows Intellistripe 65 Card Reader.

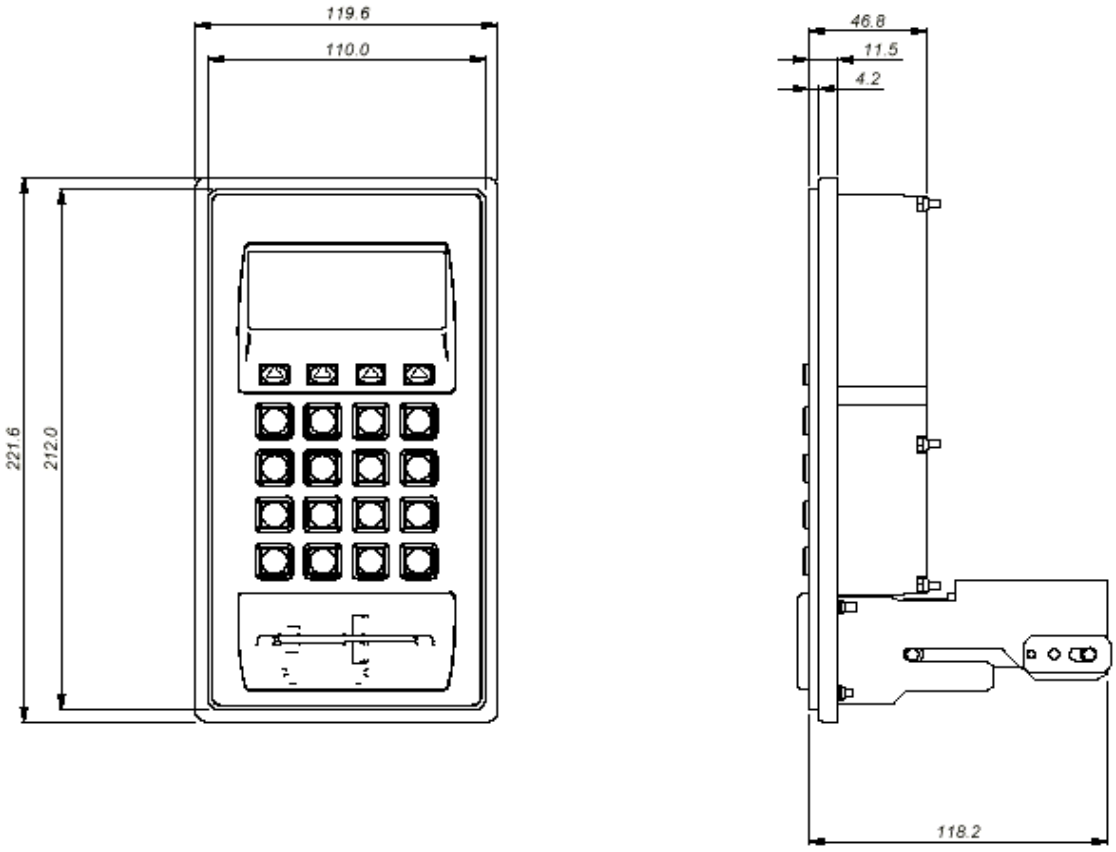

This document is provided for use and guidance of engineering personnel engaged in the installation or application of STORM data entry products manufactured by Keymat Technology Ltd. Please be advised that all information, data, and illustrations contained within this document remain the exclusive property of Keymat Technology Ltd. and are provided for the express and exclusive use as described above. This document is not supported by Keymat Technology's engineering change note, revision or reissue system. Data contained within this document is subject to periodic revision, reissue or withdrawal. Whilst every effort is made to ensure the information, data and illustrations are correct at the time of publication, Keymat Technology Ltd. are not responsible for any errors or omissions contained within this document.

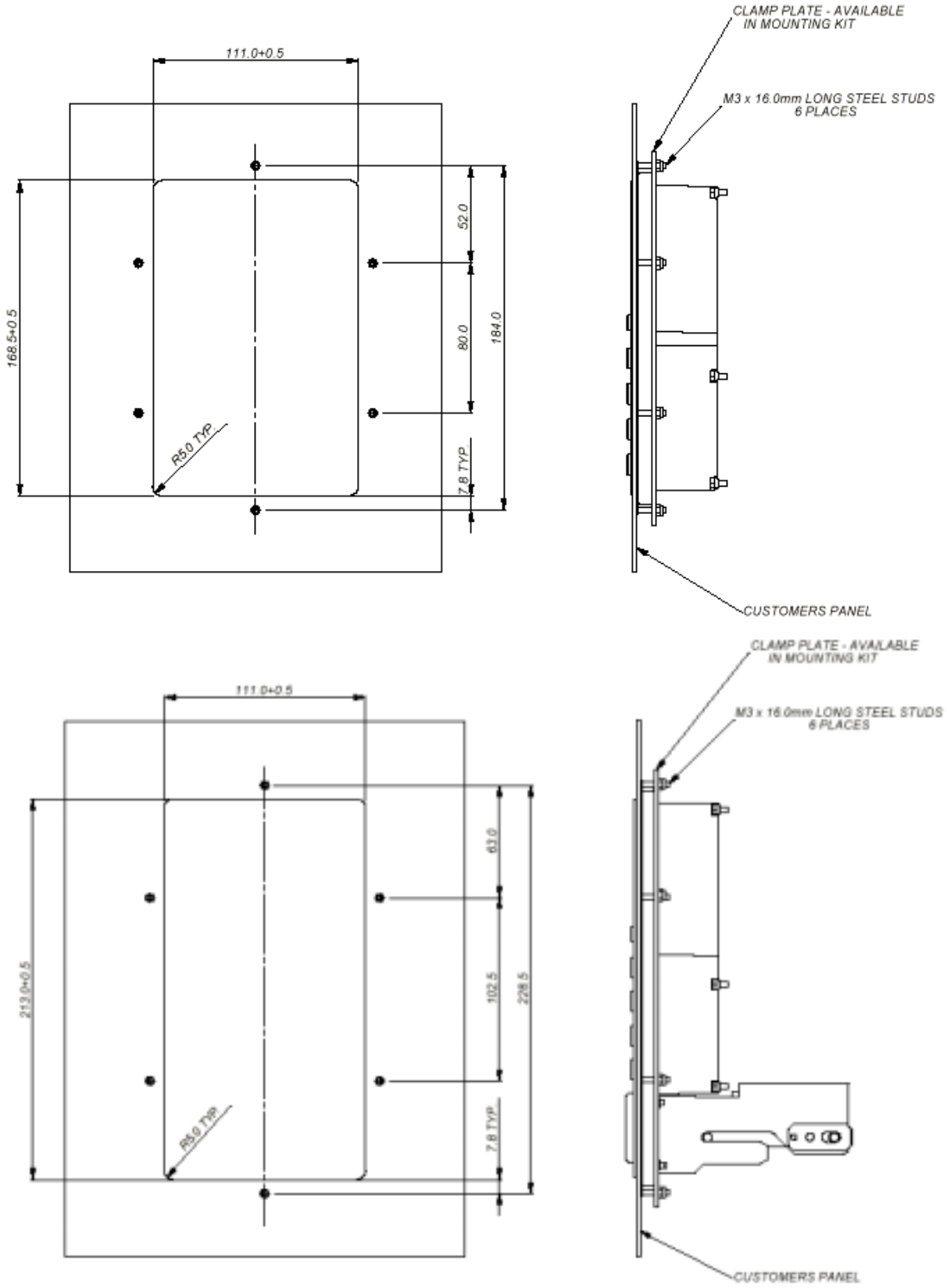

Panel Cutout (Underpanel).

This document is provided for use and guidance of engineering personnel engaged in the installation or application of STORM data entry products manufactured by Keymat Technology Ltd. Please be advised that all information, data, and illustrations contained within this document remain the exclusive property of Keymat Technology Ltd. and are provided for the express and exclusive use as described above. This document is not supported by Keymat Technology's engineering change note, revision or reissue system. Data contained within this document is subject to periodic revision, reissue or withdrawal. Whilst every effort is made to ensure the information, data and illustrations are correct at the time of publication, Keymat Technology Ltd. are not responsible for any errors or omissions contained within this document.

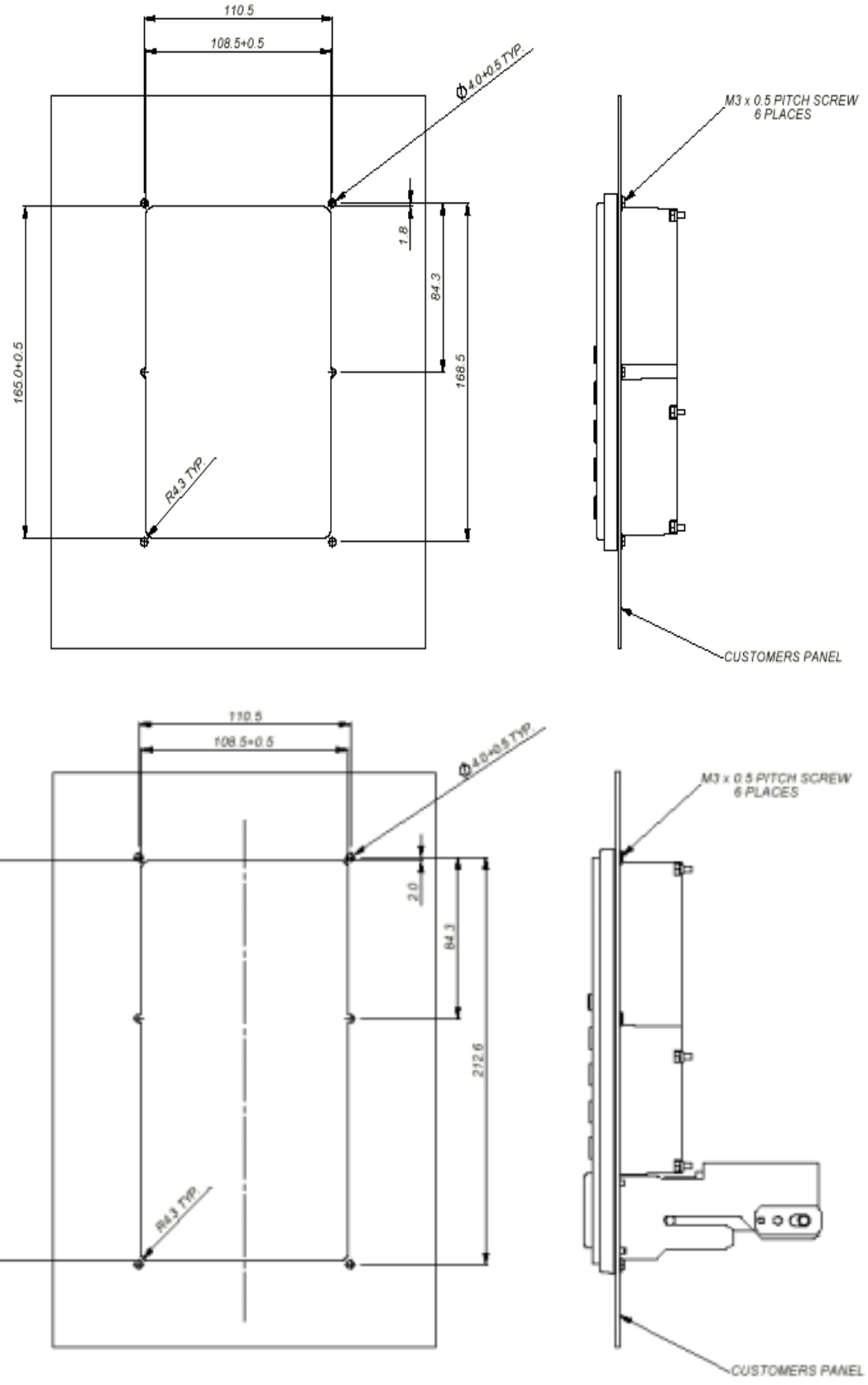

Panel Cutout (Top Mount).

This document is provided for use and guidance of engineering personnel engaged in the installation or application of STORM data entry products manufactured by Keymat Technology Ltd. Please be advised that all information, data, and illustrations contained within this document remain the exclusive property of Keymat Technology Ltd. and are provided for the express and exclusive use as described above. This document is not supported by Keymat Technology's engineering change note, revision or reissue system. Data contained within this document is subject to periodic revision, reissue or withdrawal. Whilst every effort is made to ensure the information, data and illustrations are correct at the time of publication, Keymat Technology Ltd. are not responsible for any errors or omissions contained within this document.

Section 10. Ordering Details

Main Units	Vandal Resist or Robust	Full Size or Reduced Footprint	Display	Reader	Keytops
Storm PN					
FT1K 050	Vandal Resist	Reduced Footprint	None	None	Chromed Metal Infill
FT1K 055	Vandal Resist	Full Size	None	Bracket for INT65	Chromed Metal Infill
FT1K 080	Vandal Resist	Reduced Footprint	Character	None	Chromed Metal Infill
FT1K 085	Vandal Resist	Full Size	Character	Bracket for INT65	Chromed Metal Infill
FT4K 090	Robust	Reduced Footprint	Character	None	GFX
FT4K 095	Robust	Full Size	Character	Bracket for INT65	GFX
FT4K 100	Robust	Reduced Footprint	None	None	GFX
FT4K 105	Robust	Full Size	None	Bracket for INT65	GFX
Accessories					
Storm PN					
FTMK 0001	Mounting Kit .	FT Full Size.			
FTMK 0101	Mounting Kit.	FT Reduced Footprint.			
FTWK0101	Window	Replacement Kit.			
If the unit you require is not shown please contact your STORM Distributor or e-mail us direct at www.keymat.com					

This document is provided for use and guidance of engineering personnel engaged in the installation or application of STORM data entry products manufactured by Keymat Technology Ltd. Please be advised that all information, data, and illustrations contained within this document remain the exclusive property of Keymat Technology Ltd. and are provided for the express and exclusive use as described above. This document is not supported by Keymat Technology's engineering change note, revision or reissue system. Data contained within this document is subject to periodic revision, reissue or withdrawal. Whilst every effort is made to ensure the information, data and illustrations are correct at the time of publication, Keymat Technology Ltd. are not responsible for any errors or omissions contained within this document.

Section 11. Manufacturers Data for Card Readers / Displays.

Card Readers

Refer to **Magtek** website: **www.magtek.com**

Ref No.	Description.
99875141	IntelliStripe 65 RS-232 INSERTION READER TECHNICAL REFERENCE MANUAL.
99875161	IntelliStripe 65, Command Reference Manual.
99875163	MCP, Serial Transport Protocol Reference Manual.
99875164	Mag-Tek Communication Protocol, Driver Reference Manual.

Displays

Refer to **Powertip** website: **www.powertip.tw , FAQ's are at** www.powertip.com.tw/technical/Q&A.asp

Standard fitment character display is :-

20 Char x 4 Line Display	PC 2004LRU-AWA-H	or PC 2004LRU-ASO-H	-20° C to +70 °C

Alternative normal temp range fitment is :-

20 Char x 4 Line Display	PC 2004LRU-AEA-B	0 to 50 °C

Operating Voltages (V_{op}) for each type of display are as follows :-

LCD Type	Vop for N.T.	Vop for W.T.
Character	4.2 ~ 4.8V	5 ~ 9V
Graphic	5.5 ~ 26V	6 ~ 28V

Note: N.T. = normal temperature W.T.= wide temperature

What is temperature compensation and why is required?

A LCD operating voltage varies at different temperatures. The operating voltage must rise as temperature lowers or the contrast will degrade. Conversely, the operating voltage must fall as the temperature rises or the contrast will degrade. For this reason it is often a requirement, with graphics modules, to control the input voltage accordingly. The temperature compensation circuit is the circuit that controls the input voltage as the temperature changes. This temperature compensation circuit can be located on the LCD module or on the customer's motherboard.

This document is provided for use and guidance of engineering personnel engaged in the installation or application of STORM data entry products manufactured by Keymat Technology Ltd. Please be advised that all information, data, and illustrations contained within this document remain the exclusive property of Keymat Technology Ltd. and are provided for the express and exclusive use as described above. This document is not supported by Keymat Technology's engineering change note, revision or reissue system. Data contained within this document is subject to periodic revision, reissue or withdrawal. Whilst every effort is made to ensure the information, data and illustrations are correct at the time of publication, Keymat Technology Ltd. are not responsible for any errors or omissions contained within this document.