Brand of NTN corporation

Technical data

USPE204

Bearing units



Grey cast housing, radial insert ball bearing with socket set screws, single lip seal

KIT CONTENT

US204G2, PE204

VISUAL (S)

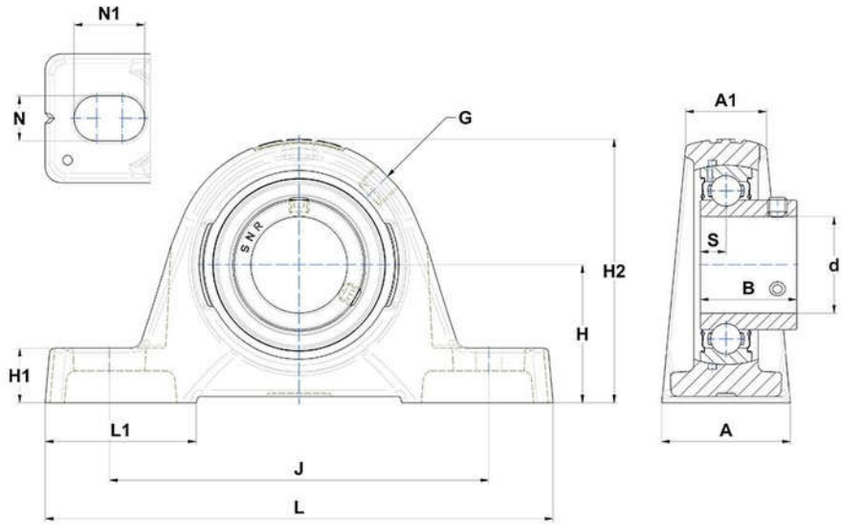

PRODUCT DEFINITION

Brand	SNR
A - Housing width	32 mm
A1 - Housing top width	19 mm
B - Width of Inner Ring	25 mm
d - Shaft diameter	20 mm
G - Grease fitting	R1/8"

NTN Europe
1 rue des Usines · BP 2017 · 74010 Annecy Cedex · France · Tel. +33 (0)4 50 65 30 00
S.A. au capital de 322 639 919 € · RCS ANNECY B 325 821 072 · Id. Fiscale : FR 48 325 821 072
SIRET 325 821 072 00015 · Code APE 2815 Z · Code NACE 28.15

PRODUCT DEFINITION	
H - Distance mounting base to centerline spheric. seating diam.	33,3 mm
H1 - Housing foot height	14,5 mm
H2 - Housing height	64 mm
J - Mounting holes distance	97 mm
L - Housing length	130 mm
L1 - Housing foot length	40 mm
N - Mounting hole dimension	11 mm
N1 - Mounting hole length	19 mm
S - Distance front side/bearing centre	7 mm

PRODUCT PERFORMANCE	
C - Dynamic load rating	12800000 mN
C0 - Static load rating	6650000 mN
Operating temperature min.	253,15 °K
Operating temperature max.	373,15 °K

OTHER FEATURES	
Mass	0,53 kg
Recommended tightening torque for set screw	5.5 N-m