

Image may differ from product. See technical specification for details.

SAF 522

Split plummer (pillow) block housing without bearing

SAF split plummer (pillow) block housings have a two-piece, cast metal construction with inch dimensions. These housings have been developed to be the best choice for design, quality, robustness, and cost efficiency. SAF housings, when used with SKF bearings, seals

and related components, provide a tailored solution to achieve maximum service life and reduce maintenance requirements for rotating equipment.

- Robust design
- Customizable configurations
- Suitable for tough operating conditions
- Cost-effective bearing solution

Overview

Dimensions

Diameter of bearing seat	200 mm
Centre height (pillow block)	125.425 mm
Centre distance between bolt holes	344.488 mm
Centre distance between bolt holes (axial direction)	69.85 mm
Attachment bolt diameter	19.05 mm

Properties

Housing type	Pillow block
Housing configuration	Two-piece
Mounting arrangement	Through shaft/Shaft end
Number of bolt holes for fasteners	4
Material, housing	Cast iron
Bearing housing seal type	Labyrinth seal
Housing lubrication feature/possibility	Grease/Oil

Logistics

Product net weight	24 kg
eClass code	23-05-17-01
UNSPSC code	31171519

Technical specification

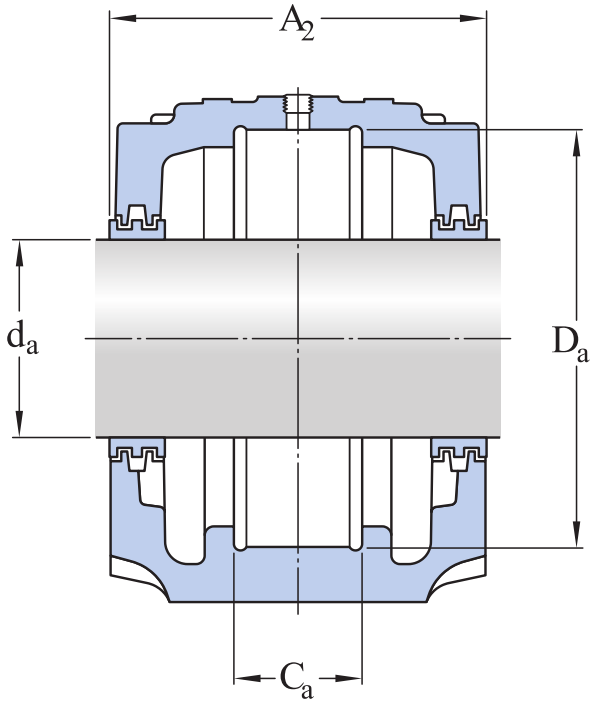

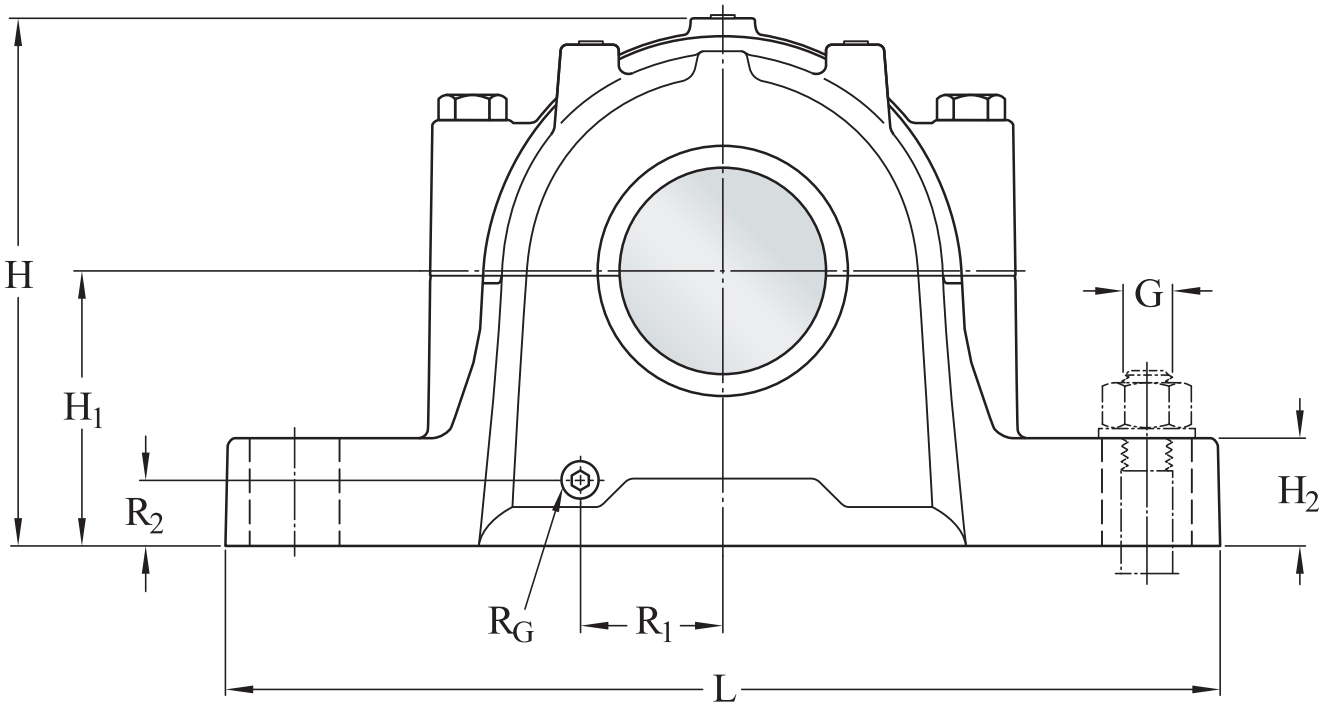

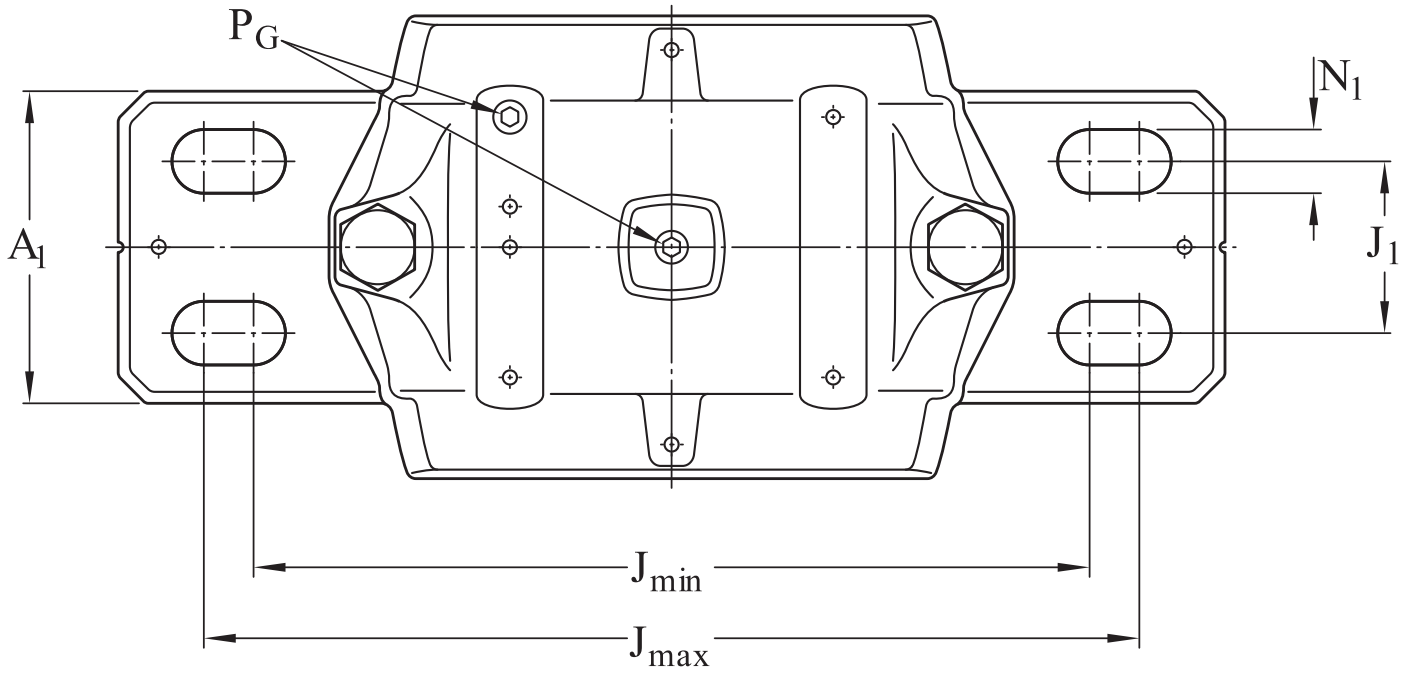

Dimensions

SHAFT

d_a	100.013 mm	Shaft diameter

BEARING SEAT

D_a	200 mm	Diameter of bearing seat
	G7	Tolerance class of bearing seat diameter
C_a	62.789 mm	Width of bearing seat
H_1	125.425 mm	Centre height

OUTSIDE DIMENSIONS

A_1	120.65 mm	Foot width
A_2	165.1 mm	Overall width
H	239.316 mm	Overall height
H_2	50.8 mm	Foot height

J	min. 320.675 mm	Distance between attachment bolts
J	max. 368.3 mm	Distance between attachment bolts
J_1	69.85 mm	Distance between attachment bolts, axial
L	419.1 mm	Overall length
N_1	22.225 mm	Width of attachment bolt hole

THREADED HOLES

R_1	67.866 mm	Distance of drain plug from centre
R_2	31.75 mm	Height of drain plug position
R_G	3/8-18 NPT	Thread of drain hole
P_G	1/4-18 NPT	Thread of grease fitting in cap

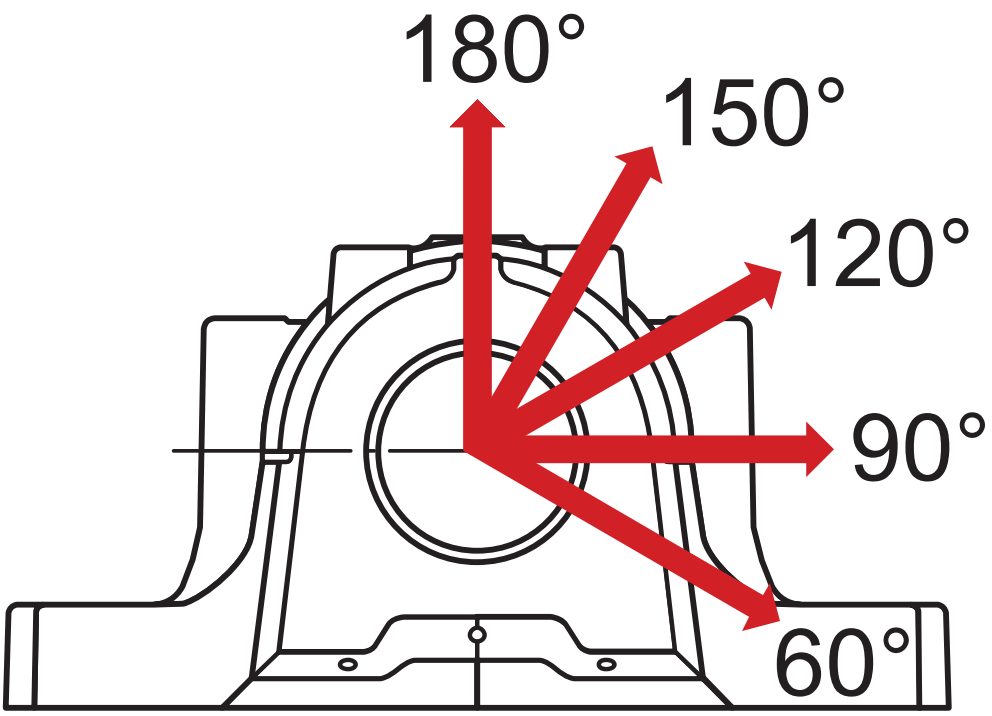

Recommended safe loads

$P_{60°}$	149 kN	Safe load at 60° load angle
$P_{90°}$	89 kN	Safe load at 90° load angle
$P_{120°}$	55.6 kN	Safe load at 120° load angle
$P_{150°}$	50.7 kN	Safe load at 150° load angle

$P_{180°}$	60.9 kN	Safe load at 180° load angle
P_a	39.6 kN	Safe load, axial

Materials

Housing material	Cast iron
Corrosion protection	Paint - in accordance with ISO 12944-2, corrosivity category C2

Mounting information

Cap bolt		3/4-10 UNC x 4
Number of cap bolts		2
SAE grade of cap bolt		5
Recommended tightening torque for cap bolts		203.373 N·m
Recommended diameter for attachment bolts	G	19.05 mm
Width of included locating ring		9.728 mm
Initial grease fill, 20%		467.2 g
Initial grease fill, 40%		698.532 g

Compatible products

Component

PosiTrac labyrinth seal	2 x LOR 109
Locating (stabilizing) ring	SR-22-19

Recommended product

End cover (end plug), for SAF and SAW bearing housings	EPR 13
PosiTrac Plus contact element	2 x B 10724-109

More Information

Designs and variants

- SKF bearing housings and roller bearing units (15.5 MB)

Product details

- SKF bearing housings and roller bearing units (15.5 MB)

Tools

- SKF Product select
- SimPro Quick
- Tool and Accessory Selector for sleeves and shafts
- LubeSelect for SKF greases
- Drive-up Method Program
- Heater selection tool
- Oil Injection Method Program
- Rolling bearings mounting and dismounting instructions

Terms of use

By accessing and using this website / app owned and published by AB SKF (publ.) (556007-3495 · Gothenburg) (“SKF”), you agree to the following terms and conditions:

Warranty Disclaimer and Limitation of Liability

Although every care has been taken to assure the accuracy of the information on this website / app, SKF provides this information "AS IS" and DISCLAIMS ALL WARRANTIES, EXPRESS OR IMPLIED, INCLUDING, BUT NOT LIMITED TO, IMPLIED WARRANTIES OF MERCHANTABILITY AND FITNESS FOR A PARTICULAR PURPOSE. You acknowledge that your use of this website / app is at your sole risk, that you assume full responsibility for all costs associated with use of this website / app, and that SKF shall not be liable for any direct, incidental, consequential, or indirect damages of any kind arising out of your access to, or use of the information or software made available on this website / app.

Any warranties and representations in this website / app for SKF products or services that you purchase or use will be subject to the agreed upon terms and conditions in the contract for such product or service.

Further, for non-SKF websites / apps that are referenced in our website / app or where a hyperlink appears, SKF makes no warranties concerning the accuracy or reliability of the information in these websites / apps and assumes no responsibility for material created or published by third parties contained therein. In addition, SKF does not warrant that this website / app or these other linked websites / apps are free from viruses or other harmful elements.

Third Party Services

When viewing YouTube content via the SKF website(s) (i.e. using YouTube API Services), you agree to be bound by the YouTube Terms of Service.

Copyright

Copyright in this website / app copyright of the information and software made available on this website / app rest with SKF or its licensors. All rights are reserved. All licensed material will reference the licensor that has granted SKF the right to use the material. The information and software made available on this website / app may not be reproduced, duplicated, copied, transferred, distributed, stored, modified, downloaded or otherwise exploited for any commercial use without the prior written approval of SKF. However, it may be reproduced, stored and downloaded for use by individuals without prior written approval of SKF. Under no circumstances may this information or software be supplied to third parties.

This website /app includes certain images used under license from Shutterstock, Inc.

Trademarks and Patents

All trademarks, brand names, and corporate logos displayed on the website / app are the property of SKF or its licensors, and may not be used in any way without prior written approval by SKF. All licensed trademarks published on this website / app reference the licensor that has granted SKF the right to use the trademark. Access to this website / app does not grant to the user any license under any patents owned by or licensed to SKF.

Changes

SKF reserves the right to make changes or additions to this website / app at any time.