VEO

TIME RELAY / MULTIFUNCTION TIME RELAY

V2ZA10 3MIN 24-240V AC/DC

Art.Nr.: 125500

V2ZA10P 3MIN 24-240V AC/DC

Art.Nr.: 125510

- 5 functions
- 4 time ranges
- Supply voltage 24-240V AC/DC
- 1 change-over contact
- Width 22,5 mm

Control elements

- Fine adjustment
- Setting of time range
- Function selector

Status indication

- LED U: Supply voltage



TECHNICAL DATA

SUPPLY CIRCUIT		
Terminals		A1-A2
Supply voltage		24 ... 240V AC/DC
Supply voltage tolerance		+10 / -10 %
Rated frequency		50 / 60Hz or DC
Rated frequency tolerance		48 ... 63Hz
Rated consumption	230 V AC	typ. 0,35 W / 1,6 VA
	24 V DC	typ. 0,06 W / 0,06 VA
Backup power time		< 50 ms
Recovery time		> 100 ms
Drop-out voltage		≥ 8 V

TIMING CIRCUIT		
Time ranges	4	0,1 ... 1 s
		1 ... 10 s
		6 s ... 1 min
		18 s ... 3 min

RANGE OF FUNCTIONS		
Functions	5	E, A, nWa, nWu, nWuWa

STATUS INDICATION		
Supply voltage	LED U (green) on	supply voltage applied

V2ZA10 3MIN 24-240V AC/DC
Art.Nr.: 125500

V2ZA10P 3MIN 24-240V AC/DC
Art.Nr.: 125510

OUTPUT CIRCUIT

Terminals		15-16-18
Kind of output		bistable relay
Number of contacts	change-over contact	1
Contact material		$AgSnO_2$
Rated voltage (IEC 60947-5-1)		250V AC
Maximum switching voltage		400V AC
Mimimum switching voltage / switching current		12V / 100mA
Rated current (IEC 60947-5-1)	AC-1	5 A / 250 V
Endurance	mechanical	5 x 10^6 switching cycles
	electrical (AC-1)	50 x 10^3 switching cycles
Rated frequency of operation	with load	6/min
	without load	600/min
Fuse rating		5A fast acting

ACCURACY

Base accuracy		< 1 % (of full scale)
	time range 1s	< 10 % (of full scale)
Setting accuracy		< 5 % (of full scale)
Repeat accuracy		< 1 % or ±100 ms
Temperature influence		< 0,02 % / °C
Voltage influence		-
Frequency influence		-

ENVIRONMENTAL CONDITIONS

Ambient temperature	operation	-25 ... +60°C
	storage	-40 ... +70°C
Relative humidity		5 ... 95 %
Vibration	EN 61812-1	10 ... 60 Hz: 0,15 mm; 60 ... 150 Hz: 20 m/s^2
	EN 60947-1	2 ... 13,2 Hz: 1 mm; 13,2 ... 100 Hz: 7 m/s^2
Shock	EN 60947-1	±150 m/s^2 11 ms

GENERAL DATA

Dimensions	W x H x D	22,5 × 67 × 76 mm
Mounting		DIN rail (EN60715)
Mounting position		any

V2ZA10 3MIN 24-240V AC/DC
Art.Nr.: 125500

V2ZA10P 3MIN 24-240V AC/DC
Art.Nr.: 125510

STANDARDS

Housing material		PA 66, self-extinguishing plastic, class V-0
Degree of protection	housing	IP40
	terminals	IP20
Electrical connection	V2ZA10	Screw terminal
Wire size	flexible with wire end ferrule	0,5 ... 2,5 mm² (20 AWG ... 13 AWG)
	flexible without wire end ferrule	0,5 ... 4 mm² (20 AWG ... 12 AWG)
	rigid	0,5 ... 4 mm² (20 AWG ... 12 AWG)
Stripping length		8 mm
Tightening torque		max. 1Nm
Electrical connection	V2ZA10P	Push-in terminal
Wire size	flexible with wire end ferrule	0,25 ... 1,5 mm² (24 AWG ... 16 AWG)
	flexible with plastic ferrule	0,25 ... 0,75 mm² (24 AWG ... 19 AWG)
	flexible without wire end ferrule	0,2 ... 1,5 mm² (24 AWG ... 16 AWG)
	rigid	0,2 ... 1,5 mm² (24 AWG ... 16 AWG)
Stripping length		8 mm
MTTF		-
Weight		85 g

ISOLATION DATA

Pollution degree (IEC 61812-1)		2
Overvoltage category (IEC 61812-1)		III
Rated insulation voltage (IEC 61812-1)	supply circuit / output cicuit	300 V
Rated impulse withstanding voltage (IEC 61812-1)	supply circuit / output cicuit	6 kV
Insulation test voltage (IEC 61812-1)	supply circuit / output cicuit	2880 V
Degree of protection	supply circuit / output cicuit	protective seperation

STANDARDS

Product standard		IEC 61812-1
Interference immunity	IEC 61812-1	class A
Interference emission	IEC 61812-1	class A
Approvals		

V2ZA10 3MIN 24-240V AC/DC
Art.Nr.: 125500

V2ZA10P 3MIN 24-240V AC/DC
Art.Nr.: 125510

FUNCTIONS

ON delay (E)
When the supply voltage U is applied, the set interval t begins (green LED U illuminated). After the interval t has expired the output relay R switches into on-position. This status remains until the supply voltage is interrupted. If the supply voltage is interrupted before the expiry of the interval t, the interval already expired is erased and is restarted when the supply voltage is next applied.

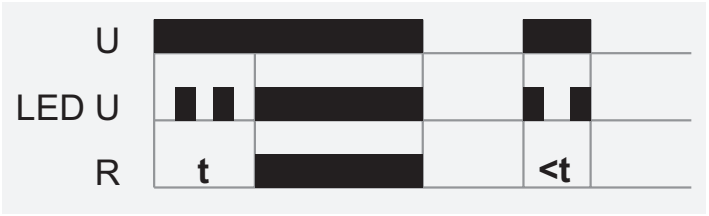

OFF-Delay without auxiliary voltage (A)
When the supply voltage U is supplied, the output relay R switches into on-position (green LED U illuminated). If the supply voltage is interrupted (green LED U not illuminated), the set interval t begins. After the set interval t has expired the output relay R switches into off-position. If the supply voltage is reconnected before the interval t has expired the interval already is erased and is restarted with the next cycle.

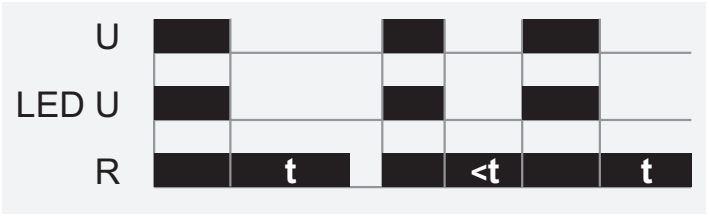

Maintained single shot trailing edge (nWa)
When the supply voltage U is supplied, the output relay R remains into off-position (green LED U illuminated). As soon as the supply voltage is interrupted the output relay switches into on-position and the set interval t begins (green LED not illuminated). After the set interval t has expired the output relay switches into off-position. When the supply voltage is reconnected before the interval t has expired, the unit continue to perform the actual single shot.

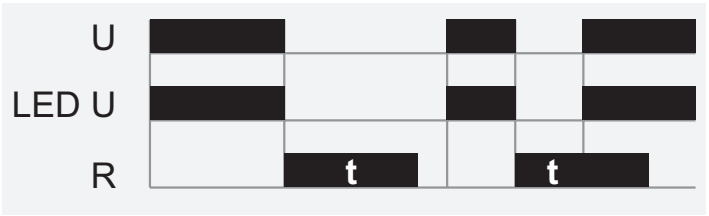

Maintained single shot leading edge (nWu)
When the supply voltage U is applied (green LED U illuminated), the output relay R switches into on-position and the set interval t begins (green LED U/t flashes). After the interval t has expired the output relay switches into off-position. This status remains until the supply voltage is interrupted. If the supply voltage is reconnected before the interval t has expired, the unit continue to perform the actual single shot.



Maintained single shot leading and trailing edge (nWuWa)
When the supply voltage U is applied, the output relay R switches into on-position and the set interval t begins (green LED U illuminated). After the interval t has expired the output relay switches into off-position. As soon as the supply voltage is interrupted the output relay switches into on-position again and the set interval t begins (green LED not illuminated). After the set interval t has expired the output relay switches into off-position. If the supply voltage is interrupted (nWu) or reconnected (nWa) before the interval t has expired the unit continue to perform the actual single shot.

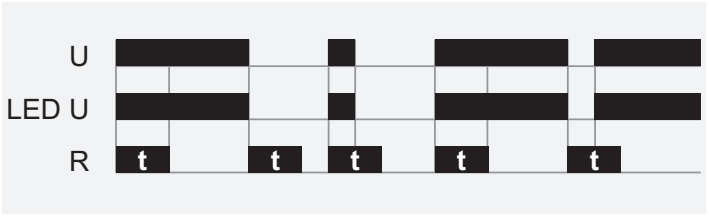

Note:
After transport the output relay maybe in any position. The correct
operation will be given after the first cycle.

V2ZA10 3MIN 24-240V AC/DC

Art.Nr.: 125500

V2ZA10P 3MIN 24-240V AC/DC

Art.Nr.: 125510

CONNECTIONS

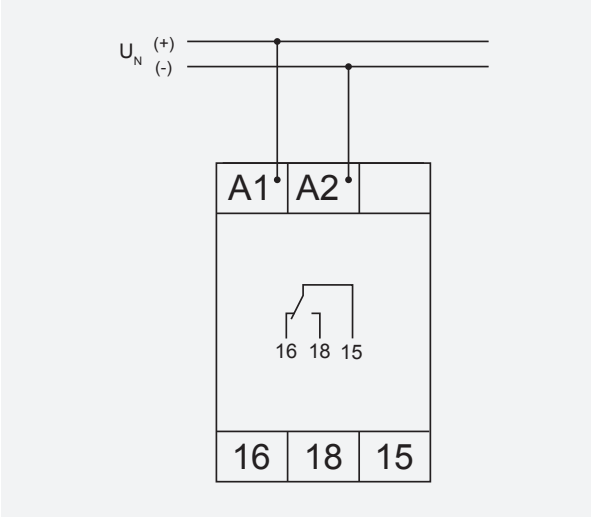

V2ZA10 3MIN 24-240V AC/DC
Art.Nr.: 125500

V2ZA10P 3MIN 24-240V AC/DC
Art.Nr.: 125510

DIMENSIONS

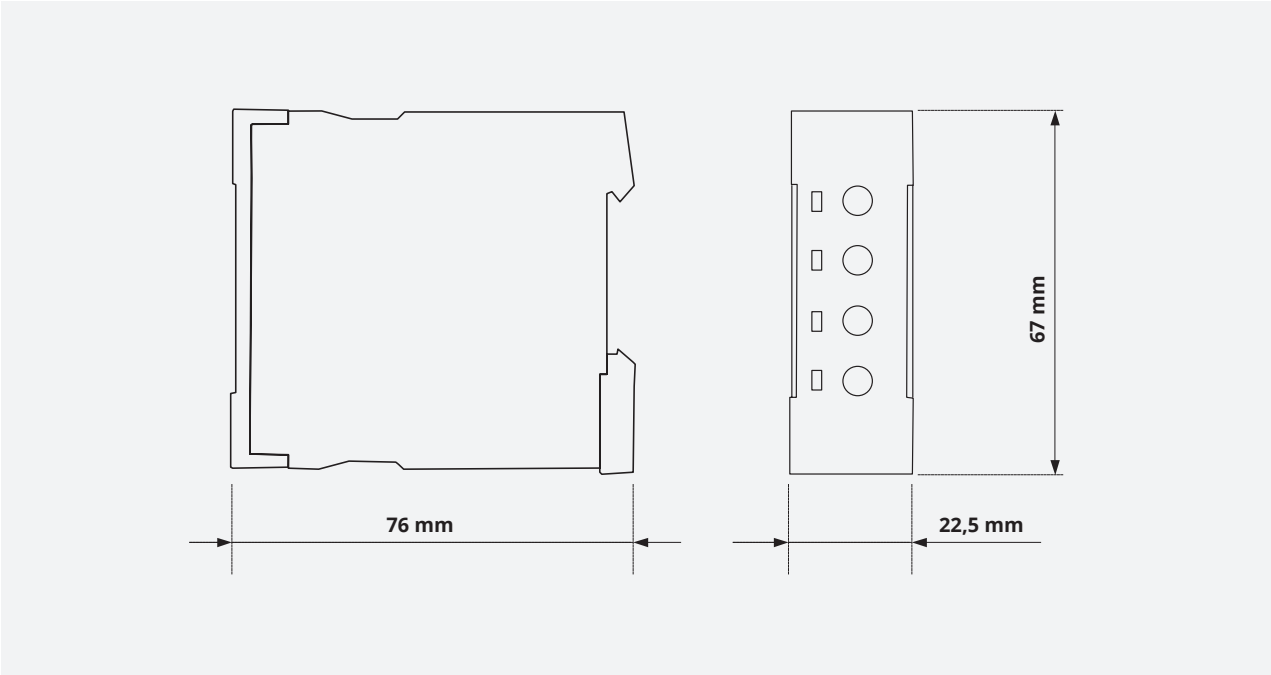

CONTACT

TELE Haase Steuergeräte Ges.m.b.H.

Vorarlberger Allee 38
1230 Vienna
Austria

CALL US +43 / 1 / 614 74 - 0

ONLINE SUPPORT info@tele-online.com