A9056208

SENSO-CASE M

Ergonomic plastic enclosure for single-handed operation. Recessed control panel for operating elements or display modules. Fastening pillars for PCBs in the top part. Space for 9 V flat battery or battery compartment 2 x AA (accessory). Cable strain relief (acc.) alternatively applicable. Equipment: with single-pole push-button.

Supply
Top and bottom part , moulded part, battery compartment lid, push-buttom with connection cables, assembly kit



TECHNICAL DATA

Material	ABS (UL 94 HB)
Protection class	IP 41
Colour	Enclosure lava, Elastic cap orange
Standards	RoHS compliant, REACH compliant

The degree(s) of protection listed refer to the empty standard enclosures (without any modifications) and are in compliance with the EN 60529 standard.

Length	180 mm
Width	86 mm
Height	45 mm
PCB length, top	74 mm
PCB width, top	74 mm

Please take the dimensions from current parts. These are subject to material- and manufacturing-specific tolerances.

PURCHASING DATA

Weight/1 part	97 g
Customs tariff number (OKW product)	39269097
Country of manufacture	Germany

CUSTOMISING OPTIONS

A9056208

SENSO-CASE M

What else do you need to create your own personal product? We can supply our enclosures and tuning knobs fully modified to suit your electronic components and design requirements. Please advise for anything else we can do for you.

Customising options for A9056208


Machining



Printing



Laser marking



Decor foils


Special material


EMC shielding


Installation / Assembly of accessories

A9056208

SENSO-CASE M

ACCESSORY "BATTERY"



A9156001
Battery holder, 2 x AA
PP
black RAL 9005

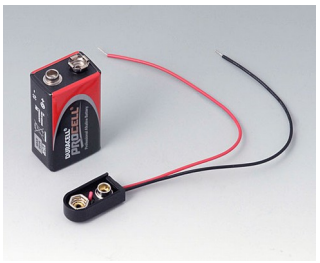

A9156002
Plug-in contact, 1 x 9 V (PP3)



A9156003
Battery holder, 1 x 9 V (PP3)
Steel
nickel-plated

ACCESSORY "PROTECTION"

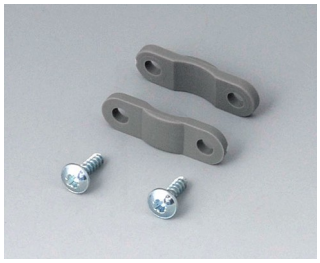

A9166004
Set of pull-relief
PA 6
volcano



A9166101
Cable strain, 5.0 - 5.9
SEBS (TPE)
volcano



A9166131
Cable strain, 4.2 - 5.0
SEBS (TPE)
volcano



A9166161
Cable strain, 3.4 - 4.2
SEBS (TPE)
volcano

ACCESSORY "WALL/HOLDER"

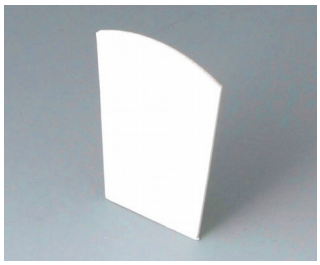

A9156005
Adhesive foil

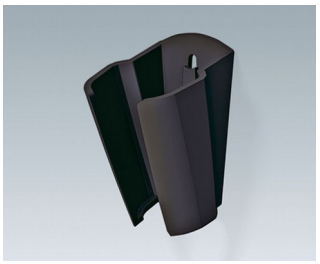

A9156308
Holder
ABS (UL 94 HB)
lava

A9056208

SENSO-CASE M

ACCESSORY "CARRYING"



A9100002
Ring eyelet
PA 6
volcano

ACCESSORY "SCREWS"



A0305031
Self-tapping screws 2.5 x 6 mm
(PZ1)

Subject to technical modification without notice. © by OKW Gehäusesysteme, Buchen/Germany.

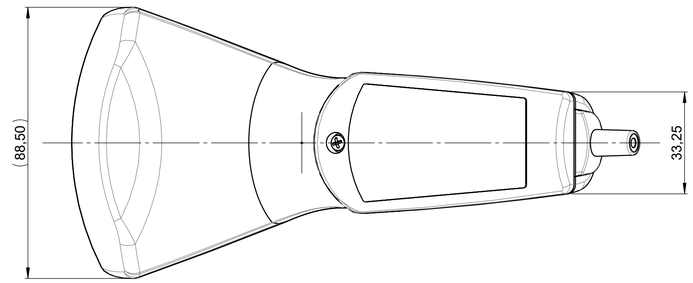

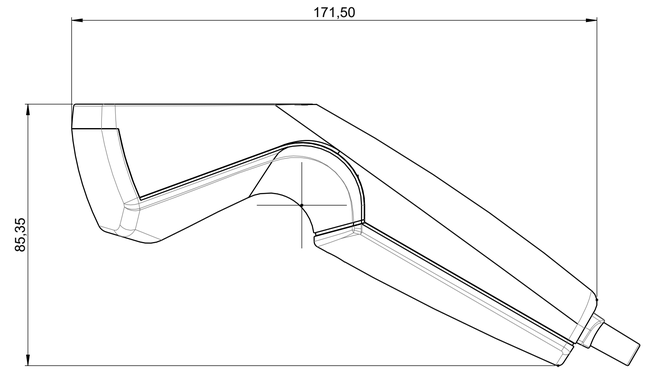

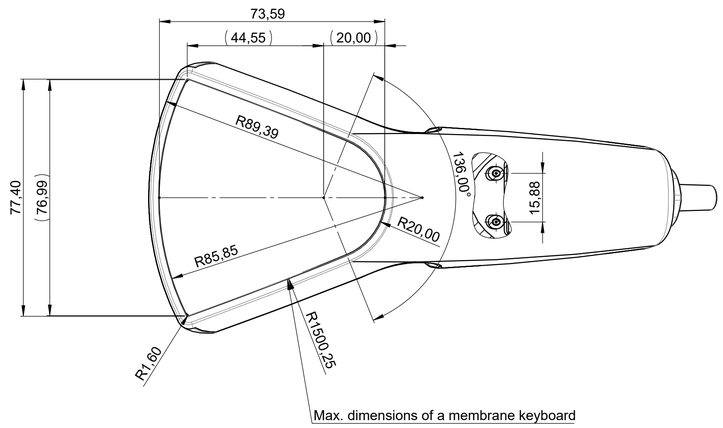

Schnitt C-C
Outline of the cutout

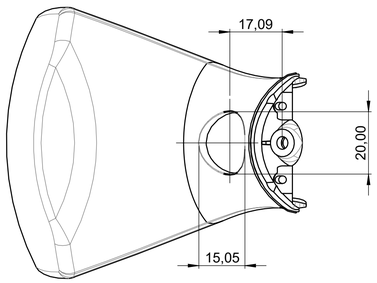

Schnitt C-C
with push-button kit

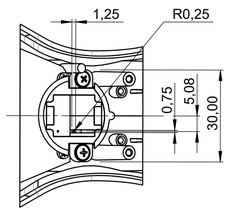

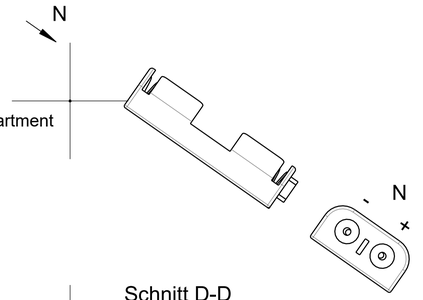

Schnitt D-D

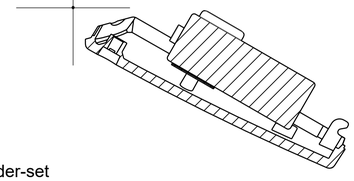

Location of the
9 V-flat battery
with plug-in contact
and spring steel holder-set
(#A9156003)

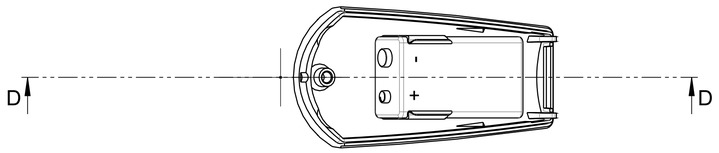

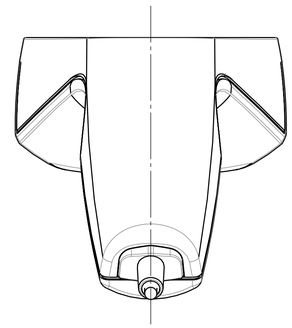

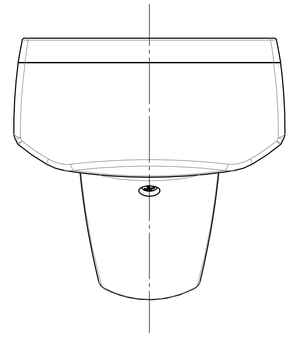

cable of a
cable with
strain reliefs
(#A9166004 plus
#A9166101 / 131 / 161)

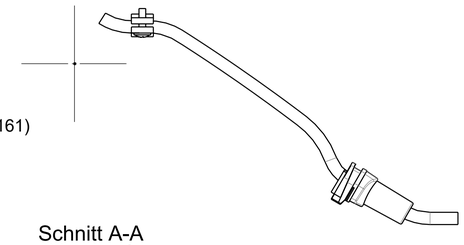

Schnitt A-A
Version I

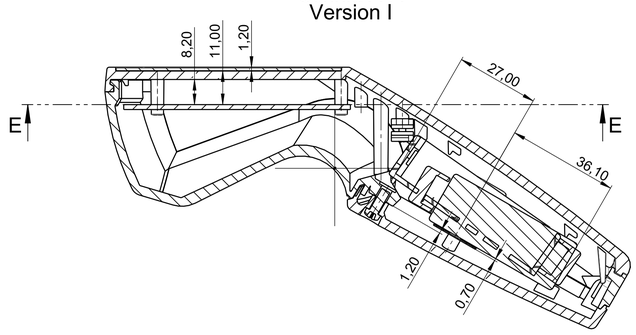

Schnitt A-A
Version II

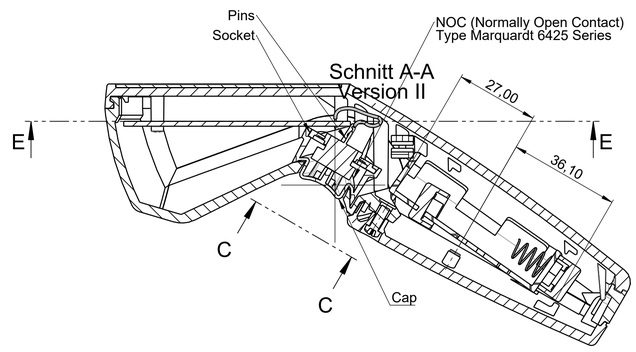

Schnitt E-E

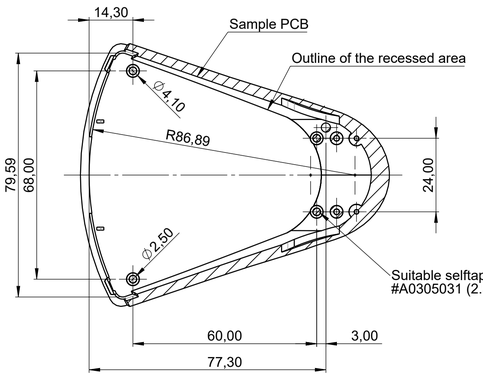

Bitte die Maße an aktuellen Teilen abnehmen. Diese unterliegen material- und produktionsspezifischen Fertigungstoleranzen.

Please take the dimensions from current parts. These are subject to material- and manufacturing-specific tolerances.

Informationskopie
wird nicht aktualisiert
Copy for Information
will not be updated

Technische Änderungen vorbehalten. Irrtümer oder Druckfehler begründen keinen Anspruch auf Schadenersatz. Wichtige Einbaumaße bitte direkt mit dem aktuellen Produkt abstimmen.

Subject to technical modification without prior notice. Typographical and other errors do not justify any claim for damages. All dimensions should be verified using an actual moulded part.

Sous reserve de modifications techniques. Toute erreur ou faute d'impression ne justifie aucune demande d'indemnisation. Nous prions les clients de vérifier les dimensions des composants avant les boitiers avant le montage.

Erst. am: 10.03.2023	Toleranzen:	Status: ENTWICKLUNG	DIN 6 Teil 2
Erst. von: J. Wiesbächer			
Freig. am:	Volumen:	Zeichnungsart: KUNDE	
Freig. von:			
Revision: 01			

This document contains proprietary information of OKW Gehäusesysteme GmbH and is tendered subject to the conditions that the information be retained in confidence not be reproduced or copied and not be used or incorporated in any product.

OKW GEHÄUSE SYSTEME

SENSO-CASE M
M Version I and II

A9056xxx | M 1:1

Für dieses Dokument behalten wir uns alle Urheberrechte vor. Es darf auch auszugsweise weder vervielfältigt noch Dritten in irgendeiner Form zugänglich gemacht werden.

Dateiname: 00008978