Brand of NTN corporation

# Technical data



## 6003ZZ

Single row deep groove ball bearings

Deep groove ball bearing, radial contact, pressed steel cage, shields on both sides

## VISUAL (S)

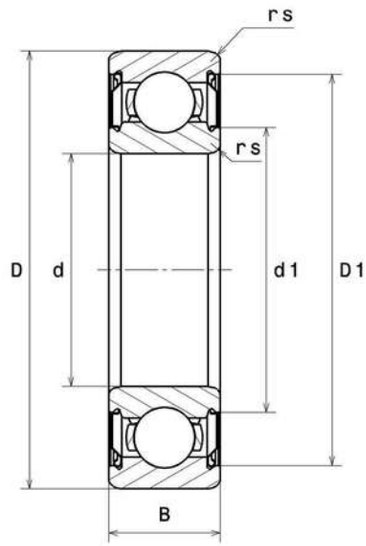


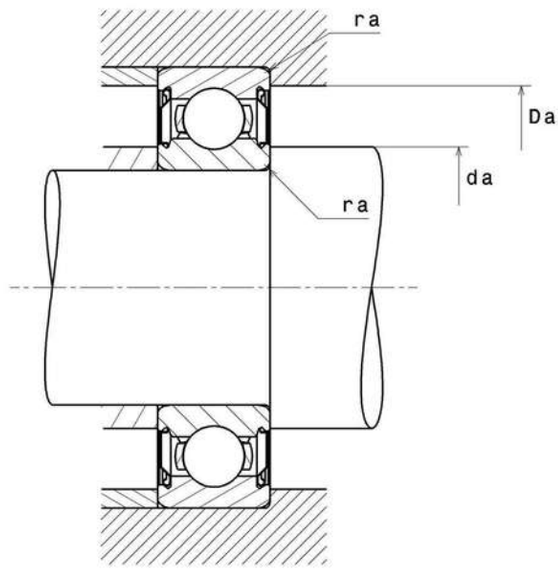


**NTN Europe**
1 rue des Usines · BP 2017 · 74010 Annecy Cedex · France · Tel. +33 (0)4 50 65 30 00
S.A. au capital de 322 639 919 € · RCS ANNECY B 325 821 072 · Id. Fiscale : FR 48 325 821 072
SIRET 325 821 072 00015 · Code APE 2815 Z · Code NACE 28.15

# 6003ZZ
Single row deep groove ball bearings

| PRODUCT DEFINITION | |
|---|---|
| **Brand** | SNR |
| **d - Internal diameter** | 17 mm |
| **D - External diameter** | 35 mm |
| **B - Bearing/Inner ring width** | 10 mm |
| **d1 - External diameter inner ring** | 21,3 mm |
| **D1 - Inner diameter outer ring** | 31,3 mm |
| **rs - Min fillet radius** | 0,3 mm |
| **Radial clearance class** | CN |
| **Mass** | 0,037 kg |

| PRODUCT PERFORMANCE | |
|---|---|
| **C - Dynamic load** | 6,3 kN |
| **C0 - Static load** | 3,25 kN |
| **Cu - Fatigue limit load** | 0,15 kN |
| **f0 - Coefficient** | 14.4 |
| **Nref - Reference thermal speed** | 20000 tr/min |
| **Nlim - Mechanical Limit Speed** | 28000 tr/min |
| **Tmin - Min operating temperature** | -30 °C |
| **Tmax - Max operating temperature** | 120 °C |

| BEARING FREQUENCIES | |
|---|---|
| **BPFO - Characteristic outer ring frequency (60 rpm)** | 4.084 Hz |
| **BPFI - Characteristic inner ring frequency (60 rpm)** | 5.916 Hz |
| **FTF - Characteristic cage frequency (60 rpm)** | 0.408 Hz |
| **BSF - Characteristic rolling element frequency (60 rpm)** | 5.276 Hz |

# 6003ZZ
## Single row deep groove ball bearings

| ABUTMENT | |
|---|---|
| **da min - Min shoulder diameter IR** | 19 mm |
| **da max - Max shoulder diameter IR** | 21,3 mm |
| **Da max - Max shoulder diameter OR** | 33 mm |
| **ra max - Max shaft & housing fillet radius** | 0,3 mm |

## INDUSTRY CALCUL FACTORS

**Equivalent dynamic radial load**

P = X.Fr + Y.Fa

| $\frac{f_0 F_a}{C_0}$ | e | Fa / Fr ≤ e | | Fa / Fr > e | |
|---|---|---|---|---|---|
| | | X | Y | X | Y |
| 0.172 | 0.19 | 1 | 0 | 0.56 | 2.3 |
| 0.345 | 0.22 | | | | 1.99 |
| 0.689 | 0.26 | | | | 1.71 |
| 1.03 | 0.28 | | | | 1.55 |
| 1.38 | 0.3 | | | | 1.45 |
| 2.07 | 0.34 | | | | 1.31 |
| 3.45 | 0.38 | | | | 1.15 |
| 5.17 | 0.42 | | | | 1.04 |
| 6.89 | 0.44 | | | | 1 |

**Equivalent static radial load**

Po = Xo.Fr + Yo.Fa

| $X_0$ | $Y_0$ |
|---|---|
| 0.6 | 0.5 |

For single or DT bearing arrangement :

If Po <Fr, then use Po = Fr