PINCH SOLENOID VALVE
2/2 – NC (Normally closed)

S106

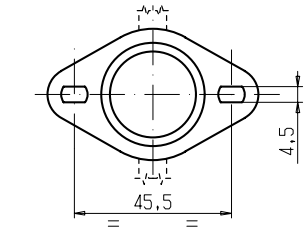

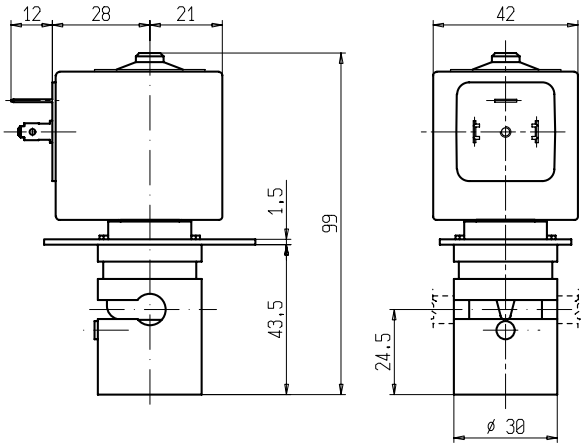



► GENERAL FEATURES

Pinch solenoid valve, suitable to shut off media without producing neither turbulent flows nor dead spaces.
High flow rate under the same conditions of internal diameter of different solenoid valves; the system allows a bi-directional through flow.
The valves are suitable for soft SILICONE tubings or others, similar as to elasticity and hardness (50 shore A).
The tubing is the only material in contact with the fluid.
The tubings are not included in our supply.

►INSTALLATION

Solenoid valve can be mounted in any position.

► MATERIALS

Body	Anodized aluminum
Pinching device	POM (reinforced acetal copolymer)
Internal components	Stainless steel
Core tube	Stainless steel

► COIL

Continuous duty	ED 100%
Encapsulation material	PET (polyethylene terephftalate) fiberglass reinforced
Insulation class	F (140°C)
Ambient temperature	-10 C° +60 °C
Electric connection	DIN 46340- 3 poles plug-connectors (DIN 43650)
Protection degree	IP 65 (DIN 40050) with plug-connectors
Voltages DC	12-24V (+10% -5%) (Other voltages on request).

TUBINGS		Pinching strength (kg)	Series and type		Power absorption (W)	Notes	Weight (kg)
I.D. (mm)	O.D. (mm)		Valve	Coil			
4,8	7,9	1,100	S106-08	Z130A	13	-	0,440
6,4	9,5	1,400	S106-09				

► NOTE

- For the use of a soft tubing with outside diameter smaller than 6mm it is necessary to install the tubing guide sleeve (drawing K29501).
- In case the tubing is not placed in its seat, the solenoid valve could operate incorrectly.

THE VALIDITY OF REPORTED DATA IS REFERRED TO THE DATE OF ISSUE. POSSIBLE UPDATING ARE AVAILABLE ON REQUEST

0402/0406