IM5117

Inductive sensor

IMC3040-BPKG/US-100-DPS

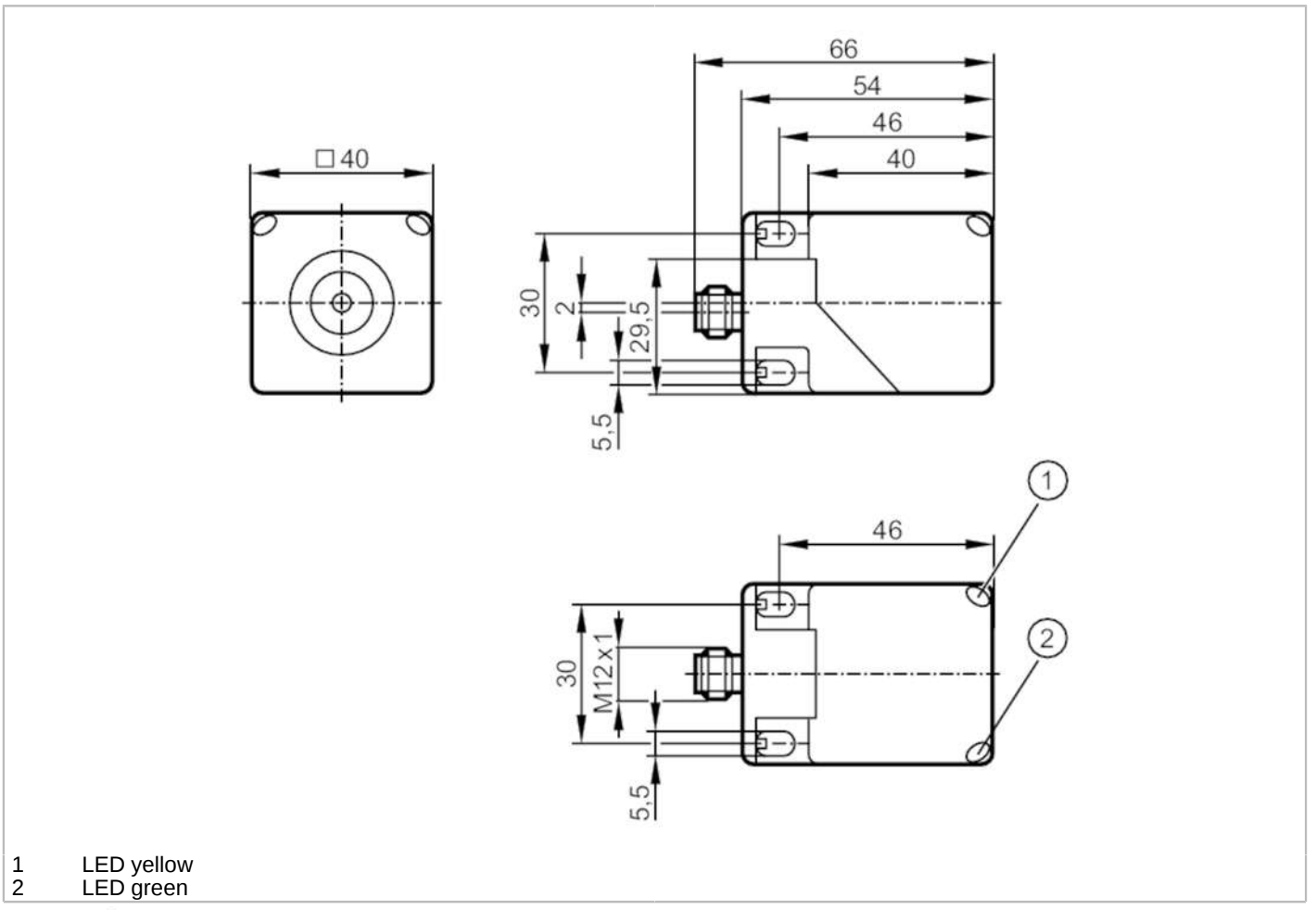

1 LED yellow
2 LED green

Product characteristics		
Electrical design		PNP
Output function		normally open
Sensing range	[mm]	40
Housing		rectangular
Dimensions	[mm]	40 x 40 x 54
Electrical data		
Operating voltage	[V]	10...36 DC
Current consumption	[mA]	< 20
Protection class		II
Reverse polarity protection		yes
Outputs		
Electrical design		PNP
Output function		normally open
Max. voltage drop switching output DC	[V]	2.5
Permanent current rating of switching output DC	[mA]	200
Switching frequency DC	[Hz]	60

IM5117

Inductive sensor

IMC3040-BPKG/US-100-DPS

Short-circuit protection			yes
Type of short-circuit protection			pulsed
Overload protection			yes
Detection zone			
Sensing range	[mm]		40
Operating distance	[mm]		0...32.4
Accuracy / deviations			
Correction factor			steel: 1 / stainless steel: 0.7 / brass: 0.4 / aluminium: 0.4 / copper: 0.3
Hysteresis	[% of Sr]		1...20
Operating conditions			
Ambient temperature	[°C]		-25...70
Protection			IP 67
Tests / approvals			
EMC		EN 61000-4-2 ESD	8 kV CD / 6 kV AD
		EN 61000-4-3 HF radiated	10 V/m
		EN 61000-4-4 Burst	2 kV
		EN 61000-4-5 Surge	0,5 kV line to line, Ri: 2 Ohm
		EN 61000-4-6 HF conducted	10 V
		EN 55011	class B
MTTF	[years]		1494
UL approval		Ta	-25...70 °C
		Enclosure type	Type 1
		power supply	Class 2
		File number UL	E174191
Mechanical data			
Weight	[g]		151.5
Housing			rectangular
Sensing face			5 positions selectable
Mounting			non-flush mountable
Dimensions	[mm]		40 x 40 x 54
Materials			PA
Displays / operating elements			
Display		switching status	1 x LED, yellow
		operation	1 x LED, green
Remarks			
Pack quantity			1 pcs.

IM5117

Inductive sensor

IMC3040-BPKG/US-100-DPS

Electrical connection - plug

Connector: 1 x M12; coding: A; Locking: locking, rotatable

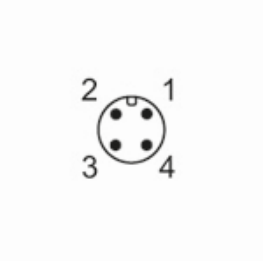

Connection

