RSSD-RJ45S-4422-15M
Industrial Ethernet Cable – Extension Cable

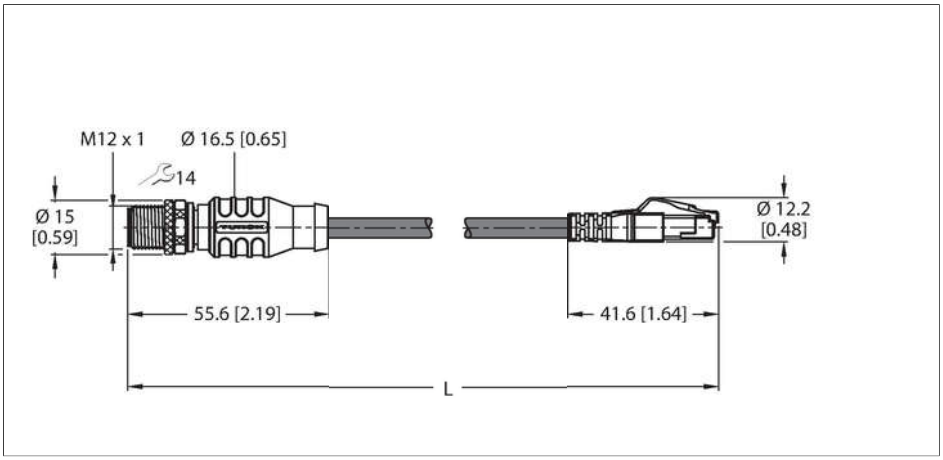

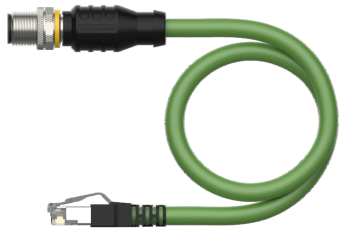

Technical data

Type	RSSD-RJ45S-4422-15M
ID	6635173
Connector A	Male, M12 × 1, Straight, D-coded
Number of pins	4
Contacts	Metal, CuZn, Gold-plated
Contact carriers	Plastic, TPU, Black
Connector body	Plastic, TPU, Black
Coupling nut/screw	Brass, CuZn, Nickel-plated
Tightening torque (range)	0.8 … 1 Nm (observe max. torque of mating connector!)
Mechanical lifespan	> 100 Mating cycles
Pollution degree	3
Protection class	IP67, Only in screwed condition
Connector B	Male, RJ45, Straight
Number of Pins	4
Contacts	Metal, CuSn, Gold-plated
Contact carriers	Plastic, PC, Black
Connector body	Plastic, TPU, Black
Mechanical life	> 1000 Mating cycles
Protection class	IP20
Cable	
Network protocol	Ethernet
Cable diameter	Ø 6.5 mm ±0.20
Cable length	15 m
Cable jacket	PUR, Green
Shielding	Aluminum foil, tinned copper wire
Core insulation	TPE-O

Features

- Ethernet cable: 4-pin, AWG 22
- CAT 5E
- Jacket material: PUR
- Jacket color: green
- Shielding: overlapping aluminum foil, tinned copper wire
- Jacket diameter: 6.5 mm
- Suitable for drag chain use
- Oil resistant acc. to IEC 60811-2-1 and UL13
- Halogen free acc. to IEC 60754
- Flame retardant acc. to IEC 60332-1-2 and UL FT2, UN/ECE R118
- RoHS compliant
- PNO compliant
- UL
- RJ45 male connector
- M12 male connector, straight, D-coded
- Cable length: 15 m

Cable Cross-Section

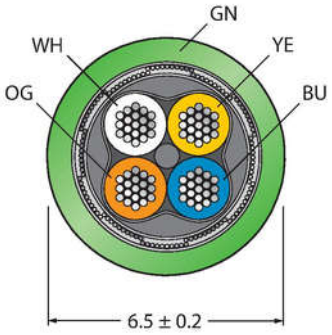

RSSD-RJ45S-4422-15M| 23-02-2025 10-47 | Technical modifications reserved

Technical data

Core cross-section	4 x 0.32 mm²
Arrangement of strands	7 x 0.25 mm
Core colors	WH, YE, BU, OG
Electrical properties at +20 °C	
Rated voltage	42 V
Test voltage	2000 V
Current	1.5 A
DC resistance (loop)	120 Ω/km
Nom. impedance	100 Ω (1MHZ)
Nom. capacitance	50 pF/m
Mechanical and chemical properties	
Bending radius (stationary installation)	≥ 5 x Ø
Bending radius (flexible use)	≥ 15 x Ø
Bending cycles	≥ 5 million
Torsional stress	± 180 °/m
Torsion cycles	Max. 100,000
Ambient temperature (fixed)	-40…+80 °C
Ambient temperature (mobile)	-30…+80 °C
Other Featues	
Qualified for drag chain use	yes
Halogen-free	yes
PVC-free	yes
UV resistance	yes
Oil-resistant	yes
Flame-retardant	yes
Approvals	UL Listed

Accessories

TORQUE-WRENCH-SET-AS	6936170
	Torque wrench set; handles with adjustable torque 0.4-1.0 Nm, torque wrench for M8 (SW9), fork wrench for M12 (SW 14)

Contact assignment

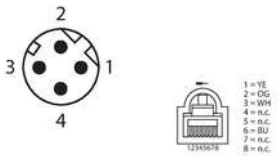

Circuit Diagram

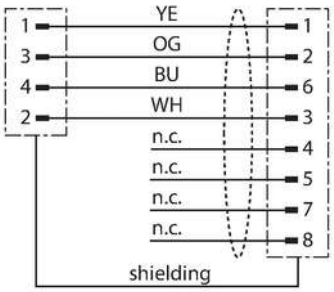

RSSD-RJ45S-4422-15M| 23-02-2025 10-47 | Technical modifications reserved