Data sheet

Liquid level monitoring relay
CM-ENS.2x

The CM-ENS.2x serves to regulate and control liquid levels and ratios of mixtures of conductive fluids. It can be used for overflow protection, dry running protection, filling or draining applications as well as max- and min- level alarming. Suitable electrodes are available as accessories.

The device is available with two different terminal versions. You can choose between the proven screw connection technology (double-chamber cage connection terminals) and the completely tool-free Easy Connect Technology (push-in terminals).



Characteristics

- Devices with wide range power supply 24-240 V AC/DC
- Cascadable
- High EMC immunity
- Adjustable response sensitivity 0.1-1000 kΩ
- Control of one or two liquid levels (min/max)
- Fill (UP) or Drain (DOWN), adjustable via front-face potentiometer
- 3 LEDs for the indication of operational states
- Screw connection technology or Easy Connect Technology available
- Housing material for highest fire protection classification UL 94 V-0
- Tool-free mounting and demounting on DIN rail
- 22.5 mm (0.89 in) width

Order data

Type	Rated control supply voltage	Output contacts	Connection technology	Order code
CM-ENS.21S	24-240 V AC/DC	1 c/o (SPDT) contact	Screw connection	1SVR730850R0200
CM-ENS.23S	110-130 / 220-240 V AC			1SVR730850R2200
CM-ENS.21P	24-240 V AC/DC		Push-in connection	1SVR740850R0200
CM-ENS.23P	110-130 / 220-240 V AC			1SVR740850R2200

Connection technology

Maintenance free Easy Connect Technology with push-in terminals

CM-ENS.2xP

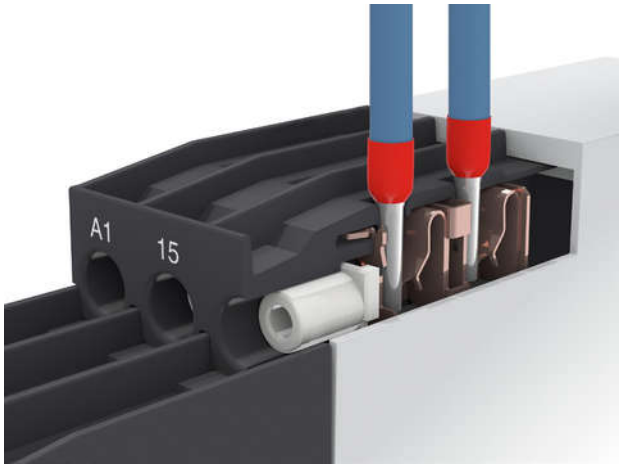

2CDC 253 026 F0011

Push-in terminals

- Tool-free connection of rigid and flexible wires with wire end ferrule
- Easy connection of flexible wires without wire end ferrule by opening the terminals
- No retightening necessary
- One operation lever for opening both connecting terminals
- For triggering the lever and disconnecting of wires you can use the same tool (Screwdriver according to DIN ISO 2380-1 Form A 0.8 x 4 mm (0.0315 x 0.157 in), DIN ISO 8764-1 PZ1 ø 4.5 mm (0.177 in))
- Constant spring force on terminal point independent of the applied wire type, wire size or ambient conditions (e. g. vibrations or temperature changes)
- Opening for testing the electrical contacting
- Gas-tight

Approved screw connection technology with double-chamber cage connection terminals

CM-ENS.2xS

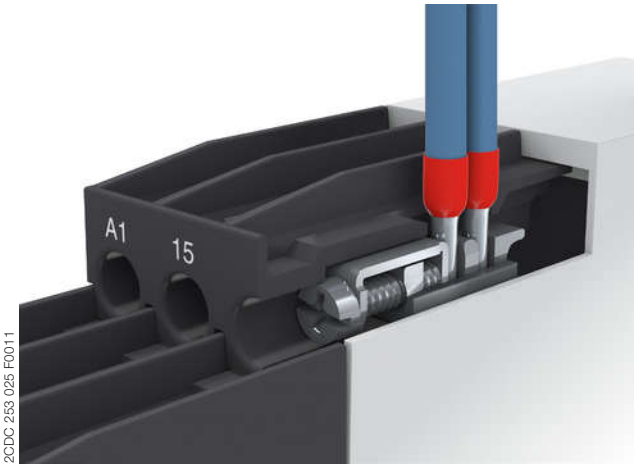

2CDC 253 025 F0011

Double-chamber cage connecting terminals

- Terminal spaces for different wire sizes
- One screw for opening and closing of both cages
- Pozidrive screws for pan- or crosshead screwdrivers according to DIN ISO 2380-1 Form A 0.8 x 4 mm (0.0315 x 0.157 in), DIN ISO 8764-1 PZ1 ø 4.5 mm (0.177 in)

Both the Easy Connect Technology with push-in terminals and screw connection technology with double-chamber cage connection terminals have the same connection geometry as well as terminal position.

Functions

Operating controls

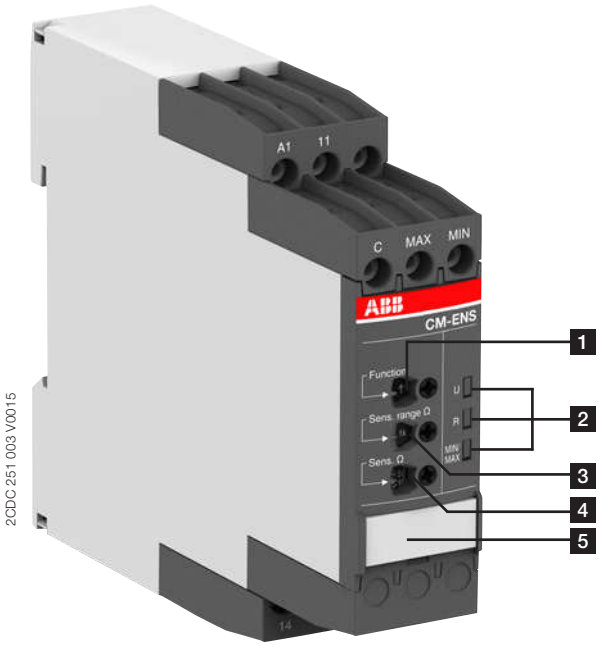

1 **Adjustment of the function**

↑ Fill

↓ Drain

2 **Indication of operational states with LEDs**

U: green LED - Status indication of control supply voltage

control supply voltage applied

R: yellow LED - Status indication of the output relays

energized

MIN/MAX: yellow LED - Status indication of the electrodes

MIN and MAX wet

MIN wet

3 **Adjustment of the response sensitivity range**

4 **Adjustment of the response sensitivity**

5 **Marker label**

Application / Monitoring function

The liquid level monitoring relay CM-ENS monitors and controls the liquid level and ratios of mixtures of conductive fluids. It is used for filling and draining applications, to protect pumps against dry-running, tanks against overflow and for signalization of the status of the monitored liquid level.

Application example

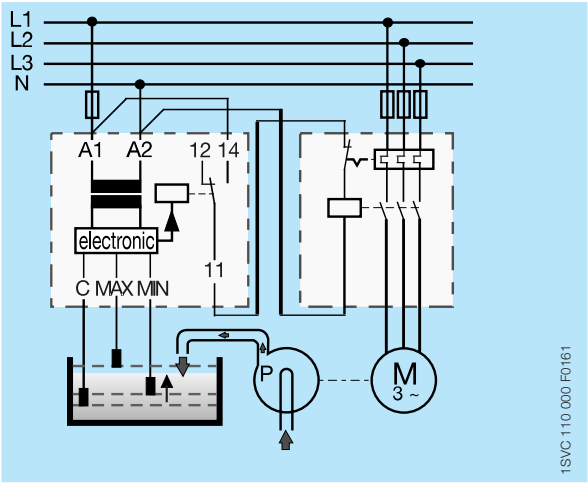

Liquid level control - fill - selected function "↑" (UP)

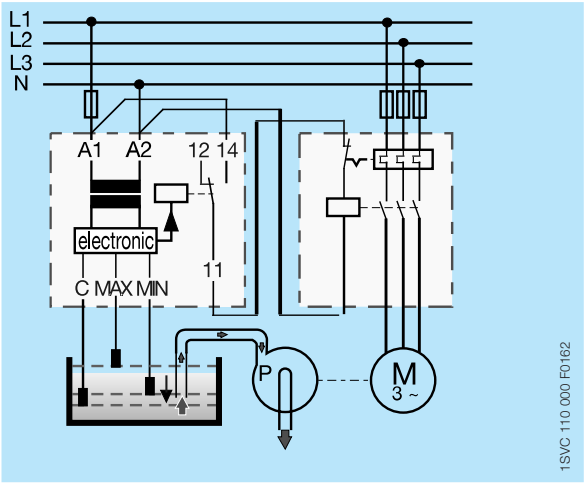

Liquid level control - drain - selected function "↓" (DOWN)

Operating mode with three electrodes

The CM-ENS.2x measures the electrical resistance of the liquid between two immersion electrodes and a reference electrode. The function fill (↑) or drain (↓) can be selected via a front-face potentiometer. If the fill function is selected, the output relay is energized until the MAX-electrode becomes wet. Then it is de-energized and not re-energized until the MIN-electrode becomes dry. If the drain function is selected, the output relay energizes as soon as the MAX-electrode becomes wet. It remains energized until the liquid level has dropped below the MIN-electrode.

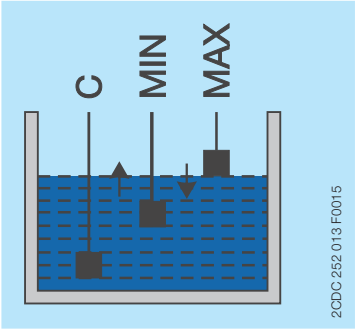

Operation with three electrodes

Operating mode with two electrodes

If only one level should be controlled, only the MAX-electrode shall be connected at the monitoring relay (see picture Operation with two electrodes).

If the fill function (↑) is selected, the output relay is energized as long as the MAX-electrode is dry and it returns to the original state once the MAX-electrode gets in contact with the monitored medium.

If the drain function (↓) is selected, the output relay is energized as long as the MAX-electrode is wet and it returns to the original state once the MAX-electrode is no longer in contact with the monitored medium.

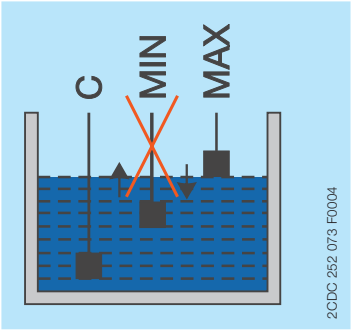

Operation with two electrodes

Cascading of several devices

With the CM-ENS.2x it is possible to use two devices in one tank. This enables, to realize a pre-warning with additional electrodes. In this way, two additional alarm outputs for exceeding or dropping below the normal level can be implemented in addition to the filling levels MAX and MIN. Also reserve pump can be connected to the additional device.

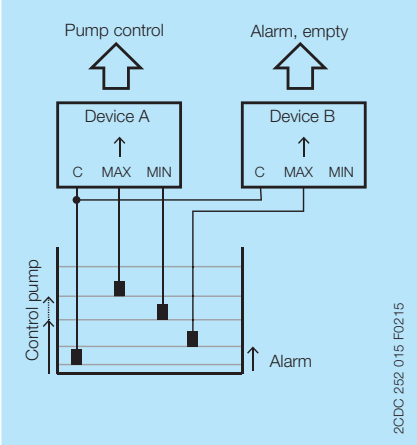

Fillling with alarm empty

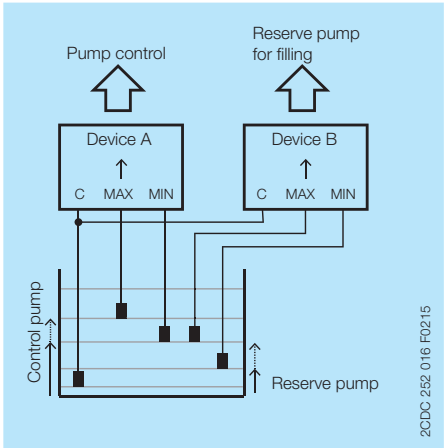

Filling with reserve pump

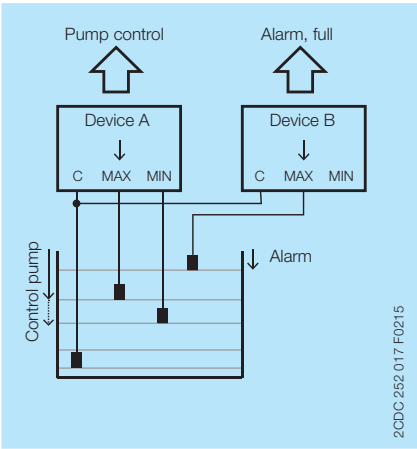

Draining with alarm full

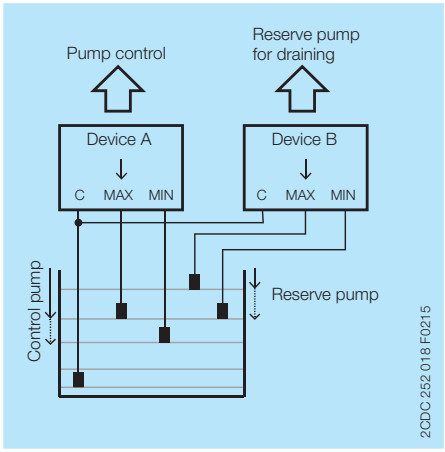

Draining with reserve pump

Electrical connection

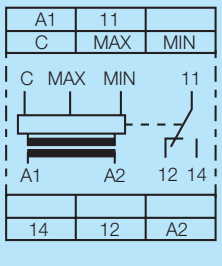

A1–A2	Control supply voltage
11–12/14	1 c/o (SPDT) contact
C	Reference electrode
MAX	Maximum level electrode
MIN	Minimum level electrode

Connection diagram CM-ENS.21

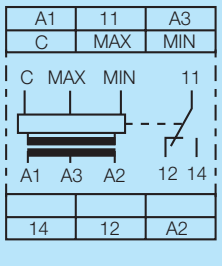

A1–A2	Control supply voltage 220-240 V AC
A3-A2	Control supply voltage 110-130 V AC
11–12/14	1 c/o (SPDT) contact
C	Reference electrode
MAX	Maximum level electrode
MIN	Minimum level electrode

Connection diagram CM-ENS.23

Function diagrams

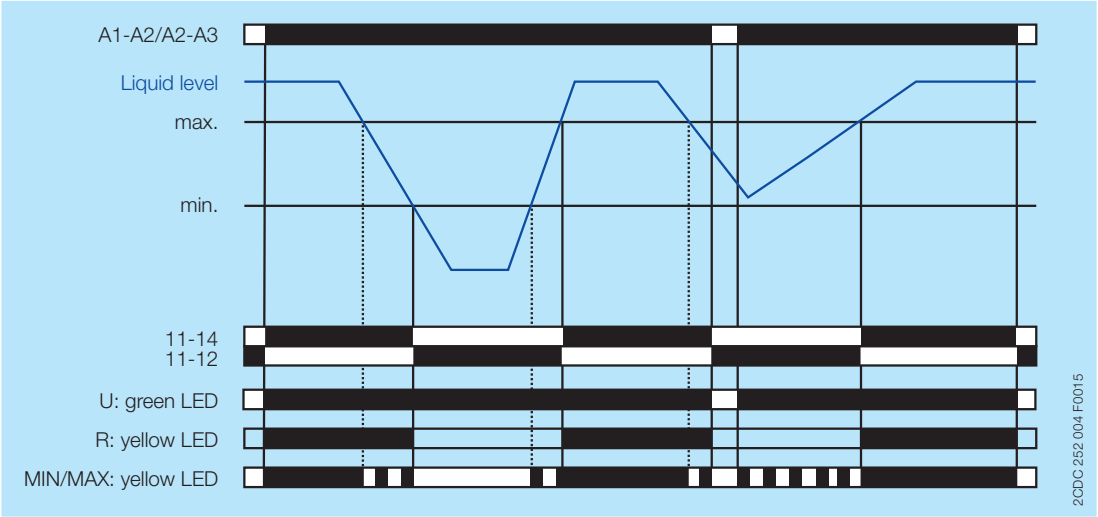

Drain CM-ENS.x

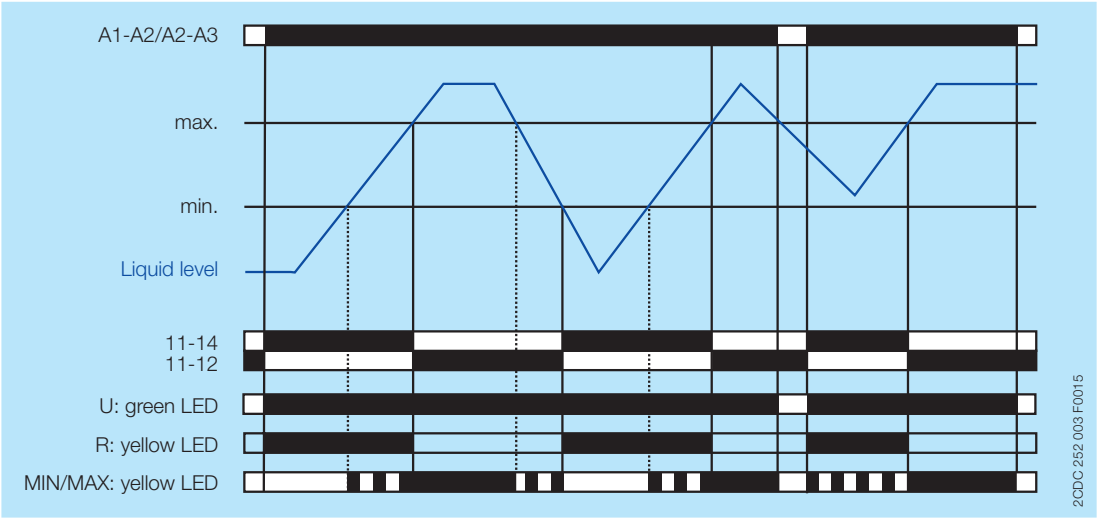

Fill CM-ENS.x

Technical data

Data at T_a = 25 °C and rated values, unless otherwise indicated

Input circuit

Type		CM-ENS.2x	
Supply circuit			
Rated control supply voltage U_s	CM-ENS.21: A1-A2	24-240 V AC/DC	
	CM-ENS.23: A1-A2	220-240 V AC	
	CM-ENS.23: A3-A2	110-130 V AC	
Rated control supply voltage U_s tolerance		-15...+10 %	
Rated frequency		50/60 Hz	
Frequency range		47-63 Hz	
Typical current / power consumption	24 V AC	25 mA / 0.6 W	
	110-130 V AC	20 mA / 2.6 VA	
	220-240 V AC	8.5 mA / 2.1 VA	
	24-240 V AC/DC	11 mA / 2.6 VA	
Power failure buffering time	min.	20 ms	
Start-up time t_s	range 0.1-1 kΩ	max. 900 ms	
	range 1-10 kΩ	max. 900 ms	
	range 10-100 kΩ	max. 1.3 s	
	range 100-1000 kΩ	max. 6.3 s	

Measuring circuit		MAX-MIN-C	
Sensor type		electrode	
Monitoring functions		fill or drain, selectable	
Measuring principle		conductivity measurement	
Number of electrodes		3	
Response sensitivity		adjustable: 0.1-1000 kΩ	
Maximum electrode voltage		6 V AC	
Maximum electrode current		2 mA	
Electrode supply line		**max. cable capacity**	**max. cable length**
	range 0.1-1 kΩ	200 nF	1000 m
	range 1-10 kΩ	200 nF	1000 m
	range 10-100 kΩ	20 nF	100 m
	range 100-1000 kΩ	4 nF	20 m
Max. measuring cycle	range 0.1-1 kΩ	700 ms	
	range 1-10 kΩ	700 ms	
	range 10-100 kΩ	1.1 s	
	range 100-1000 kΩ	5 s	

User interface

Indication of operational states		
Control supply voltage	U	green LED
Output relay energized	R	yellow LED
Electrode / alarm status	MAX/MIN	yellow LED

Output circuits

Kind of output		11-12/14	relay, 1 c/o (SPDT) contact
Operating principle			open- or closed-circuit principle (selectable)
Contact material			AgNi alloy, Cd free
Rated operational voltage U_e			250 V AC
Minimum switching voltage / Minimum switchting current			12 V / 10 mA
Maximum switchting voltage / Maximum switching current			See 'Load limit curves' on page 10
Rated operational current I_e		AC-12 (resistive) at 230 V	4 A
		AC-15 (inductive) at 230 V	3 A
		DC-12 (resistive) at 24 V	4 A
		DC-13 (inductive) at 24 V	2 A
AC rating (UL 508)	Utilization category (Control Circuit Rating Code)		B 300 pilot duty; general purpose 250 V, 4 A, cos φ 0.75
	max. rated operational voltage		300 V AC
	max. continuous thermal current at B 300		5 A
	max. making/breaking apparent power at B 300		3600/360 VA
Mechanical lifetime			10 x 10^6 switching cycles
Electrical lifetime		AC-12, 230 V, 4 A	0.1 x 10^6 switching cycles
Maximum fuse rating to achieve short-circuit protection		n/c contact	6 A fast-acting
		n/o contact	10 A fast-acting
Conventional thermal current I_{th}			4 A

General data

MTBF			on request	
Duty time			100 %	
Dimensions			see 'Dimensional drawings'	
Weight			**Screw connection technology**	**Easy Connect Technology (push-in)**
	net weight	CM-ENS.21	0.125 kg (0.276 lb)	0.117 kg (0.258 lb)
		CM-ENS.23	0.154 kg (0.340 lb)	0.147 kg (0.324 lb)
	gross weight	CM-ENS.21	0.150 kg (0.331 lb)	0.142 kg (0.313 lb)
		CM-ENS.23	0.179 kg (0.395 lb)	0.172 kg (0.379 lb)
Mounting			DIN rail (IEC/EN 60715), snap-on mounting without any tool	
Mounting position			any	
Minimum distance to other units			CM-ENS.21: not necessary CM-ENS.23: 10 mm if contact current > 2 A	
Material of housing			UL 94 V-0	
Degree of protection		housing	IP50	
		terminals	IP20	

Electrical connection

			Screw connection technology	**Easy Connect Technology (push-in)**
Connecting capacity		fine-strand with(out) wire end ferrule	1 x 0.5-2.5 mm² (1 x 18-14 AWG) 2 x 0.5-1.5 mm² (2 x 18-16 AWG)	2 x 0.5-1.5 mm² (2 x 18-16 AWG)
		rigid	1 x 0.5-4 mm² (1 x 20-12 AWG) 2 x 0.5-2.5 mm² (2 x 20-14 AWG)	2 x 0.5-1.5 mm² (2 x 20-16 AWG)
Stripping length			8 mm (0.32 in)	
Tightening torque			0.6 - 0.8 Nm (7.08 lb.in)	-

Environmental data

Ambient temperature ranges	operation	-25...+60 °C (-13...+140 °F)
	storage	-40...+85 °C (-40...+185 °F)
Damp heat, cyclic (IEC/EN 60068-2-30)		6 x 24 h cycle, 55 °C, 95 % RH
Climatic class (IEC/EN 60721-3-3)		3K5 (no condensation, no ice formation)
Vibration, sinusoidal		Class 2
Shock, half-sine		Class 2

Isolation data

Rated impulse withstand voltage U_{imp}	supply circuit / measuring circuit	4 kV
	supply circuit / output circuits	4 kV
	measuring circuit / output circuits	4 kV
	output circuit 1 / output circuit 2	4 kV
Rated insulation voltage U_i	supply circuit / measuring circuit	300 V
	supply circuit / output circuits	300 V
	measuring circuit / output circuits	300 V
	output circuit 1 / output circuit 2	300 V
Basic insulation	supply circuit / measuring circuit	250 V AC / 300 V DC
	supply circuit / output circuits	250 V AC / 300 V DC
	measuring circuit / output circuits	250 V AC / 300 V DC
	output circuit 1 / output circuit 2	250 V AC / 300 V DC
Protective separation (IEC/EN 61140, EN 50178)	supply circuit / measuring circuit	250 V AC / 300 V DC
	supply circuit / output circuits	250 V AC / 300 V DC
	measuring circuit / output circuits	250 V AC / 300 V DC
Pollution degree		3
Overvoltage category		III

Standards / Directives

Standards	IEC/EN 60947-5-1, IEC/EN 60255-27
Low Voltage Directive	2014/35/EU
EMC Directive	2014/30/EU
RoHS Directive	2011/65/EU

Electromagnetic compatibility

Interference immunity to		IEC/EN 61000-6-2, IEC/EN 60255-26
electrostatic discharge	IEC/EN 61000-4-2	Level 3 (6 kV / 8 kV)
radiated, radio-frequency, electromagnetic field	IEC/EN 61000-4-3	Level 3 (10 V/m)
electrical fast transient / burst	IEC/EN 61000-4-4	Level 3, 2 KV / 5 kHz
surge	IEC/EN 61000-4-5	Level 3, installation class 3, supply circuit and measuring circuit 1 kV L-L, 2 kV L-earth
conducted disturbances, induced by radio-frequency fields	IEC/EN 61000-4-6	Level 3, 10 V
voltage dips, short interruptions and voltage variations	IEC/EN 61000-4-11	Class 3
Interference emission		IEC/EN 61000-6-3
high-frequency radiated	IEC/CISPR 22, EN 55022	Class B
high-frequency conducted	IEC/CISPR 22, EN 55022	Class B

Technical diagrams

Load limit curves

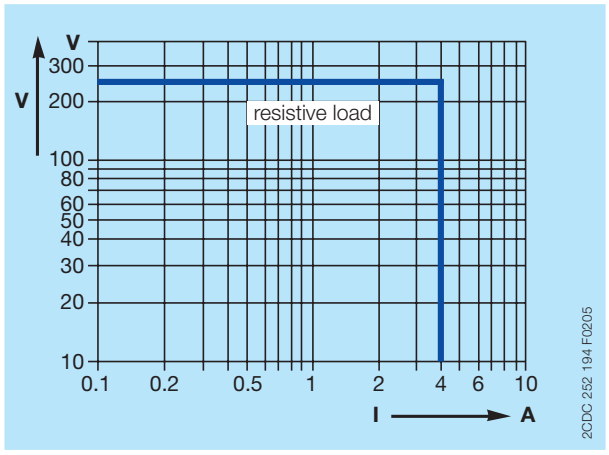

AC load (resistive)

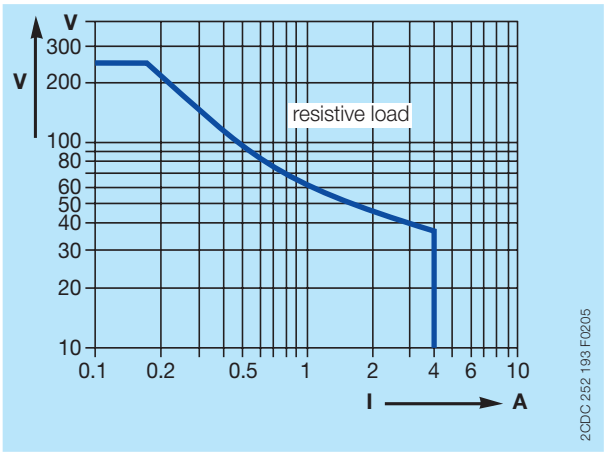

DC load (resistive)

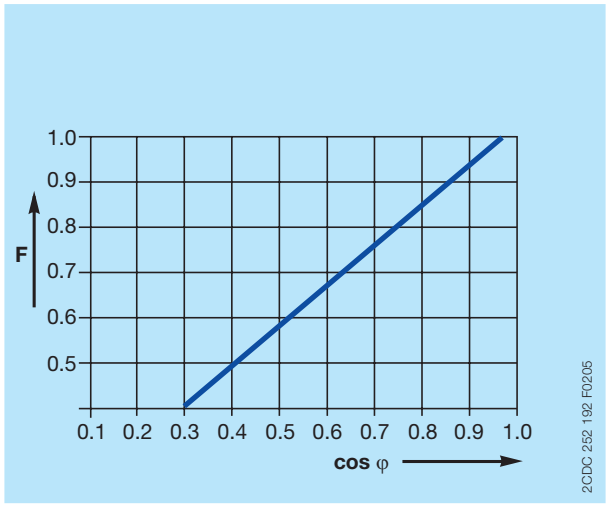

Reduction factor F for inductive AC load

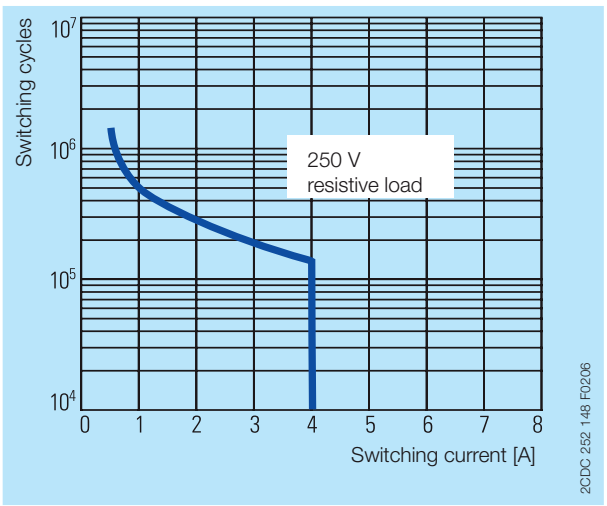

Contact life time / number of operations N
220 V 50 Hz 1 AC, 360 operations/h

Dimensions

in **mm** and inches

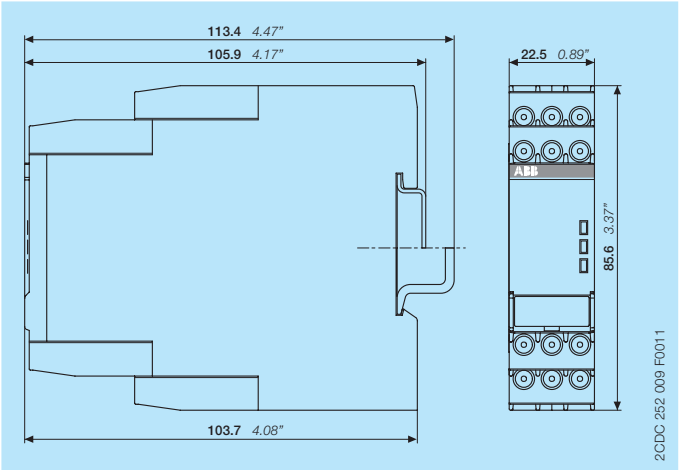

Accessories

in **mm** and inches

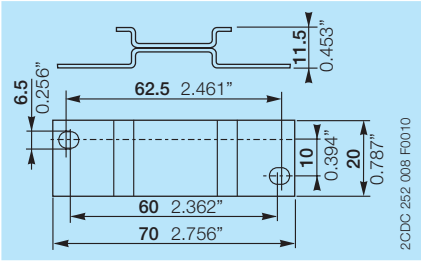

ADP.01 - Adapter for screw mounting

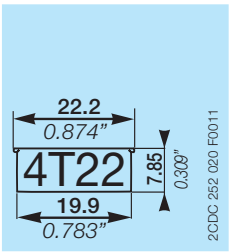

MAR.12 - Marker label for devices with DIP switches

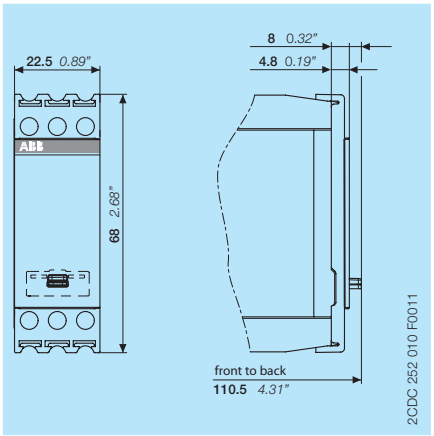

COV.11 - Sealable transparent cover

Further documentation

Document title	Document type	Document number
Electronic relays and controls	Catalog	2CDC 110 004 C02xx
Operating and installation instructions CM-ENS	Instruction manual	1SVC 730 680 M0000

You can find the documentation on the internet at www.abb.com/lowvoltage
-> Automation, control and protection -> Electronic relays and controls -> Measuring and monitoring relays.

CAD system files

You can find the CAD files for CAD systems at http://abb-control-products.partcommunity.com
-> Low Voltage Products & Systems -> Control Products -> Electronic Relays and Controls.

Contact us

ABB STOTZ-KONTAKT GmbH
P. O. Box 10 16 80
69006 Heidelberg, Germany
Phone: +49 (0) 6221 7 01-0
Fax: +49 (0) 6221 7 01-13 25
E-mail: info.desto@de.abb.com

You can find the address of your
local sales organisation on the
ABB home page
http://www.abb.com/contacts
-> Low Voltage Products and Systems

Document number 2CDC 112 229 D0201 (03/2017)

Note:
We reserve the right to make technical changes or modify the contents of this document without prior notice. With regard to purchase orders, the agreed particulars shall prevail. ABB AG does not accept any responsibility whatsoever for potential errors or possible lack of information in this document.

We reserve all rights in this document and in the subject matter and illustrations contained therein. Any reproduction, disclosure to third parties or utilization of its contents – in whole or in parts – is forbidden without prior written consent of ABB AG.

Copyright© 2017 ABB
All rights reserved