SCHAEFFLER



FAG

UCFC209-J7

Flanged housing unit

Schaeffler ID:
0822377940000

Flanged housing unit UCFC

Technical information

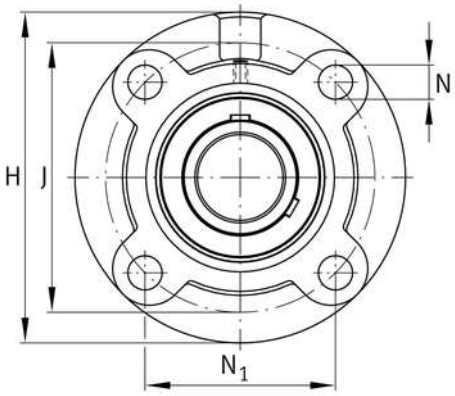

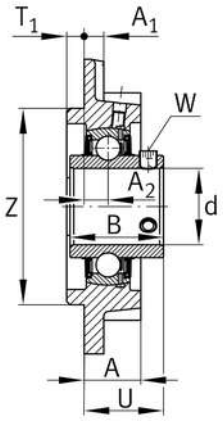

Main Dimensions & Performance Data

d	45 mm	Bore diameter
H	160 mm	Height flange
U	40,2 mm	Total height unit
C_r	32.500 N	Basic dynamic load rating, radial
C_{0r}	20.400 N	Basic static load rating, radial
C_{ur}	870 N	Fatigue load limit, radial
	2,774 kg	Weight

Mounting dimensions

J	132 mm	Distance fixing bore
J	132 mm	Pitch circle diameter (holes)
N	16 mm	Fixing bore
N_1	93,3 mm	Distance fixing bore
T_1	12 mm	Height spigot
Z	105 mm	Diameter spigot
	h8	Diameter spigot clearance
n	4	Number of screwing holes

Dimensions

A_1	14 mm	Thickness of flange
A_2	10 mm	Distance raceway
B	49,2 mm	Width
Q	M6	Connection thread lubrication

Additional information

	UC209	Bearing designation

The datasheet is only an overview of dimensions and basic load ratings of the selected product. Please always observe all further information and guidelines for this product. For further information you can use the contact form on our website.