Standard Duty Emergency Stop Switches-Types: ES-P & ES-SS 3pole

IDEM Standard Duty Emergency Stop Switches are designed to provide robust Emergency Stop protection for exposed conveyors or machines.

3 pole contact blocks provide positively operated switch contacts.

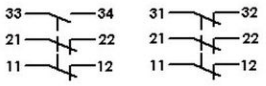

2NC 1NO 3NC

Features:

Plastic bodies (IP67) or Stainless Steel 316 (IP69K)

Conformance to ISO 13850, IEC 60947-5-1 and IEC 60947-5-5

A special lid safety trip mechanism means that the safety contacts will open if the lid is removed.

Button protection shroud version with padlock holes for 'Lock off' in maintenance situations





Type ES-P (Plastic)

Knock out for plastic version



Type ES-SS (Stainless Steel)



Type ES-SS(P) (Stainless Steel)
with button protection shroud and padlock holes

Sales Number	Type	Conduit Entry	Contacts
230001	ES -P	Knockout M20/1/2"NPT	2NC 1NO
230002	ES -P	Knockout M20/1/2"NPT	3NC

Sales Number	Type	Conduit Entry	Contacts
231001	ES -SS	M20	2NC 1NO
231002	ES -SS	½" NPT	2NC 1NO
231003	ES -SS	M20	3NC
231004	ES -SS	½" NPT	3NC

Sales Number	Type	Conduit Entry	Contacts
231005	ES -SS(P)	M20	2NC 1NO
231006	ES -SS(P)	½" NPT	2NC 1NO
231007	ES -SS(P)	M20	3NC
231008	ES -SS(P)	½" NPT	3NC

Gold Plated Contacts available for low power circuits (5V. 5mA).
Add GC to Part Number e.g. 230001-GC

Standards:	IEC 60947-5-1 IEC 60947-5-5 EN954-1 EN62061 UL508 ISO13850 ISO13849-1
Safety Classification and Reliability Data:	
Mechanical Reliability B10d	1.5 x 10^6 operations at 100mA load
EN 954-1	up to Category 4 with Safety Relay
ISO 13849-1	up to PLe depending upon system architecture
EN 62061	up to SIL3 depending upon system architecture
Safety Data - Annual Usage	8 cycles per hour / 24 hours per day / 365 days
PFHd	<1.0 x 10^{-7}
Proof Test Interval (Life)	21 years
MTTFd	214 years
Enclosure / Cover	Polyester or Stainless Steel 316
IP Rating	IP67 Plastic IP69K Stainless Steel
Mounting	4 x M4
Mounting position	Any
Conduit entries	2 x M20 or 2 x ½ " NPT by part number - Knock out for plastic version
Torque settings	Mounting M4 4.0 Nm Lid T20 Torx M4 1.5 Nm Terminals 1.0 Nm
Ambient Temperature	-25C +80 C.
Vibration resistance	10-500Hz 0.35mm
Shock resistance	15g 11ms
Weight	250g / 1000 g.
Contact type	IEC 947-5-1 Double break Type Zb Snap Action up to 3NC (positive break) 1NO (Auxiliary)
Contact Material	Silver
Termination	Clamp up to 2.5 sq. mm conductors
Rating	Utilisation Category : AC15
Operational Rating	240V. 3A.
Thermal Current (Ith)	10A.
Rated Insulation Voltage (Ui)	500V.
Withstand Voltage (Uimp)	2500V.
Short Circuit Overload Protection	Fuse Externally 10A. (FF)

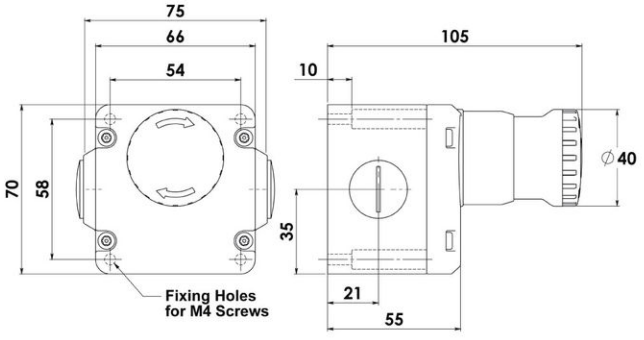

TYPE: ES-SS(STAINLESS STEEL)

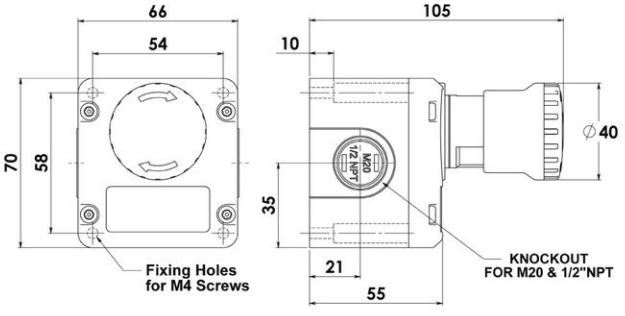

TYPE: ES-P

Standard Duty Emergency Stop Switches-Types: ESL-SS 4 pole & ATEX

IDEM Standard Duty Emergency Stop Switches are designed to provide robust Emergency Stop protection for exposed conveyors or machines.

Stainless Steel 316 housings (IP69K)

Conformance to ISO 13850, IEC 60947-5-1 and IEC 60947-5-5

A special lid safety trip mechanism means that the safety contacts will open if the lid is removed.

Button protection shroud version with Padlock holes for 'Lock off' during maintenance.

Optional 2 colour LED



Type ESL-SS(LP) (Stainless Steel) with 2 colour LED and protection shroud



Type ESL-SS (Stainless Steel)

Sales Number	Type	Conduit Entry	Contacts
232001	ESL-SS	M20	2NC 2NO
232002	ESL-SS	½" NPT	2NC 2NO
232003	ESL-SS	M20	3NC 1NO
232004	ESL-SS	½" NPT	3NC 1NO
232005	ESL-SS	M20	4NC
232006	ESL-SS	½" NPT	4NC
232007	ESL-SS	EX 3m.	1NC 1NO
232008	ESL-SS	EX 3m.	2NC
232029	ESL-SS	EX 3m.	2NC 2NO



Type ESL-SS(P) (Stainless Steel) with protection shroud and padlock holes

Sales Number	Type	Conduit Entry	Contacts
232009	ESL-SS(P)	M20	2NC 2NO
232010	ESL-SS(P)	½" NPT	2NC 2NO
232011	ESL-SS(P)	M20	3NC 1NO
232012	ESL-SS(P)	½" NPT	3NC 1NO
232013	ESL-SS(P)	M20	4NC
232014	ESL-SS(P)	½" NPT	4NC
232015	ESL-SS(P)	EX 3m.	1NC 1NO
232016	ESL-SS(P)	EX 3m.	2NC
232030	ESL-SS(P)	EX 3m.	2NC 2NO



Type ESL-SS(L) (Stainless Steel) with 2 colour LED

Sales Number	Type	Conduit Entry	Contacts
232017	ESL-SS(L)	M20	2NC 2NO
232018	ESL-SS(L)	½" NPT	2NC 2NO
232019	ESL-SS(L)	M20	3NC 1NO
232020	ESL-SS(L)	½" NPT	3NC 1NO
232021	ESL-SS(L)	M20	4NC
232022	ESL-SS(L)	½" NPT	4NC
232023	ESL-SS(LP)	M20	2NC 2NO
232024	ESL-SS(LP)	½" NPT	2NC 2NO
232025	ESL-SS(LP)	M20	3NC 1NO
232026	ESL-SS(LP)	½" NPT	3NC 1NO
232027	ESL-SS(LP)	M20	4NC
232028	ESL-SS(LP)	½" NPT	4NC
For LED models add voltage code to Sales Number			
Steady Green / Flashing Red A - 24Vdc B - 110Vac C - 230V.ac			
Steady Green / Steady Red AS-24Vdc BS-110Vac CS-230V.ac			

Gold Plated Contacts available for low power circuits (5V. 5mA).
Add GC to Part Number e.g. 232001-GC

Gold Plated Contacts available for low power circuits (5V. 5mA).
Add GC to Part Number e.g. 232017-GC

Standards: IEC 60947-5-1 IEC 60947-5-5 EN954-1 EN62061 UL508 ISO13850 ISO13849-1

Safety Classification and Reliability Data:

Mechanical Reliability B10d	1.5 x 10^6 operations at 100mA load
EN 954-1	up to Category 4 with Safety Relay
ISO 13849-1	up to PLe depending upon system architecture
EN 62061	up to SIL3 depending upon system architecture
Safety Data - Annual Usage	8 cycles per hour / 24 hours per day / 365 days
PFHd	<1.0 x 10^{-7}
Proof Test Interval (Life)	21 years
MTTFd	214 years
Enclosure / Cover	Stainless Steel 316
IP Rating	IP67 IP69K
Mounting	4 x M4
Mounting position	Any
Conduit entries	3 x M20 or 3 x ½ " NPT by part number
Torque settings	Mounting M4 4.0 Nm Lid T20 Torx M4 1.5 Nm Terminals 1.0 Nm
Ambient Temperature	-25C. 80 C.
Vibration resistance	10-500Hz 0.35mm
Shock resistance	15g 11ms
Weight	820 g.
Contact type	IEC 947-5-1 Double break Type Zb Snap Action up to 4NC (positive break) 2NO (Auxiliary)
Contact Material	Silver
Termination	Clamp up to 2.5 sq. mm conductors
Rating	Utilisation Category : AC15
Operational Rating	240V. 3A.
Thermal Current (Ith)	10A.
Rated Insulation Voltage (Ui)	500V.
Withstand Voltage (Uimp)	2500V.
Short Circuit Overload Protection	Fuse Externally 10A. (FF)

Classification Exd IIC T6 (-20≤Ta≤+60C) Gb
Ex tb IIIC T85C (-20≤Ta≤+60C) Db

