DATASHEET - MCSN4



Pressure switch, 3p, 7bar

Part no.	**MCSN4**
Catalog No.	**057679**
Alternate Catalog No.	**MCSN4**
EL-Nummer (Norway)	**4356111**

Delivery program

Note on use			This product complies with Low-Voltage Directive 2014/35/EC and EMC Directive 2014/30/EC and meets the requirements in EN 60947-5-1. This product does not meet the rail industry's standard requirements. Accordingly, the user must review it separately for the specific application at hand.
Product range			Pressure switches with main contacts
Degree of Protection			IP65
Number of poles			3 pole
Cut-in pressure and cut-out pressure: separate stepless adjustment. All the intersection points within the diagram area can be set.			
			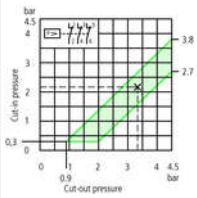
			Min. switching differential: 0.6 bar Example: Cut-out pressure 3.3 bar Cut-in pressure 2.2 bar
			Variable switching differential
Max. operating pressure		bar	7

Notes

Features

:

- With terminal cover as standard
- 1 insulated protective conductor terminal
- 1 insulated N terminal
- 2 cable entry knockouts for M20, without cable gland
- IP65 in conjunction with V-M20 cable gland
- Pressure pipe flange R ½"
- please enquire: Pressure pipe flange R ¼"
- Neoprene membrane

R ¼" corresponds to G ¼

R ½" corresponds to G ½ as per ISO 228-1

For use as a motor load switch as per IEC/EN 60947-4-1 for:

Three-phase current

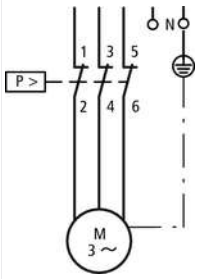

Single-phase current

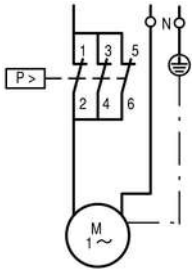

Direct current DC-3

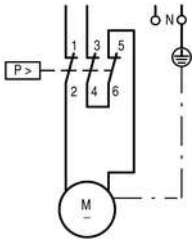

For use as control switch:

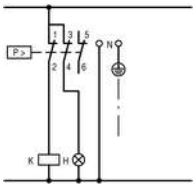

Cut-in and cut-out pressures are factory-preset as specified with type suffix → 203948

Technical data

General

Standards			IEC/EN 60947-4-1
Test pressure		bar	32
Rupturing pressure		bar	90
Operating frequency	Operations/h		≦ 1500
Climatic proofing			Damp heat, constant, to IEC 60068-2-78 Damp heat, cyclic, to IEC 60068-2-30
Ambient temperature			-25 - 70
Degree of Protection			IP65
Mounting position			As required
Mechanical shock resistance to IEC 60068-2-27	Half-sinusoidal shock 20 ms	g	> 10
Vibration resistance acc. to IEC/EN 60068-2-6	Amplitude 1 mm	Hz	36
lifespan	Operations	x 10^6	0.5
Terminal capacities		mm^2	
Solid		mm^2	1 x (0.75 - 2.5) 2 x (0.75 - 1.5)
Flexible with ferrules to DIN 46228		mm^2	1 x (0.5 - 1.5) 2 x (0.5 - 1.5)
Terminations			Flat terminal with clamping washer
Terminal screw			M4
Tightening torque of terminal screw		Nm	1.2

Contacts/switching capacity

Rated impulse withstand voltage	U_{imp}	V AC	4000
Rated insulation voltage	U_i	V	400
Overvoltage category/pollution degree			III/3
Max. short-circuit protective device			
Fuseless		Type	PKZM0-20

Fuse	gG/gL	A	20
Type of coordination			1
Rated short-circuit current	I_q (= Current r)	kA	1
AC-3			
Rated operational current			
230 V		A	15
400 V		A	11.5
Rated power P			
230 V		kW	4
400 V		kW	5.5
DC - 3			
Rated operational current			
24 V		A	16
110 V		A	12.5
250 V		A	2
Rated frequency	f	Hz	50

Design verification as per IEC/EN 61439

Technical data for design verification			
Operating ambient temperature min.		°C	-25
Operating ambient temperature max.		°C	70

Technical data ETIM 7.0

Low-voltage industrial components (EG000017) / Pressure switch (EC000243)

Electric engineering, automation, process control engineering / Low-voltage switch technology / Monitoring equipment (low-voltage switch technology) / Pressure monitoring equipment (ecl@ss10.0.1-27-37-18-14 [AKF108014])

Suitable as guard			Yes
Suitable as 2-point controller			Yes
Suitable as limiter			No
Max. operation pressure		hPa	7000
Engaging pressure		bar	0 - 3.8
Initial setting		hPa	0 - 0
Switch off pressure		bar	0 - 4.5
End setting		hPa	0 - 0
Pressure-switching differential		bar	0
Max. test pressure		bar	32
Bursting pressure		bar	90
Medium temperature		°C	25 - 80
Connection			Inner thread gas cylindrical (BSPP)
Thread size			1/2 inch
Rated voltage Ue at AC 50 Hz		V	0 - 400
Rated voltage Ue at AC 60 Hz		V	0 - 400
Rated voltage Ue at DC		V	0 - 250
Initial value measuring range pressure		Pa	0
End value measuring range pressure		Pa	0
Rated operation power at AC-3, 400 V		kW	5.5
Switching capacity at AC-3, 240 V		kA	0
Rated operation current Ie at AC-1, 400 V		A	0
Rated operation current Ie at AC-3, 400 V		A	11.5
Number of auxiliary contacts as normally open contact			0
Number of auxiliary contacts as normally closed contact			0
Number of auxiliary contacts as change-over contact			0
Type of electric connection			Screw connection
Number of normally closed contacts as main contact			3
Number of main contacts as normally open contact			0

Adjustable current range		A	0 - 0
With hand operation			No
With manual on/off switch			No
Electronic version			No
With display			No
Explosion-proof			No
Degree of protection (IP)			IP65
Degree of protection (NEMA)			Other
Height		mm	110
Width		mm	60
Diameter		mm	0
Depth		mm	96

Approvals

Product Standards			CSA-CC22.2 No. 14
CSA File No.			12528
CSA Class No.			3211-06
North America Certification			CSA certified

Dimensions

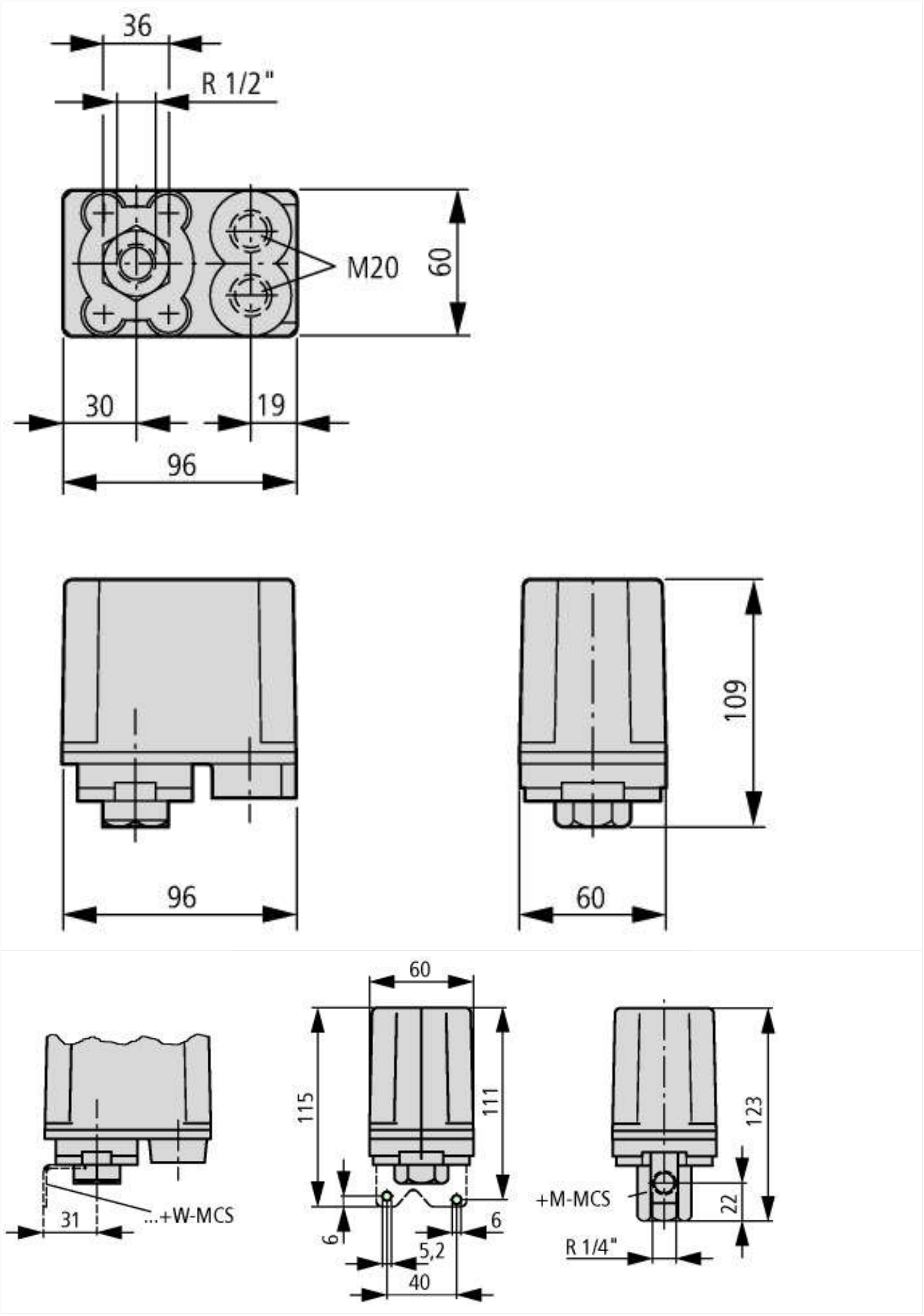
36
R 1/2"
M20
60
30
19
96
96
109
60
60
115
111
6
6
5,2
40
31
...+W-MCS
+M-MCS
123
22
R 1/4"

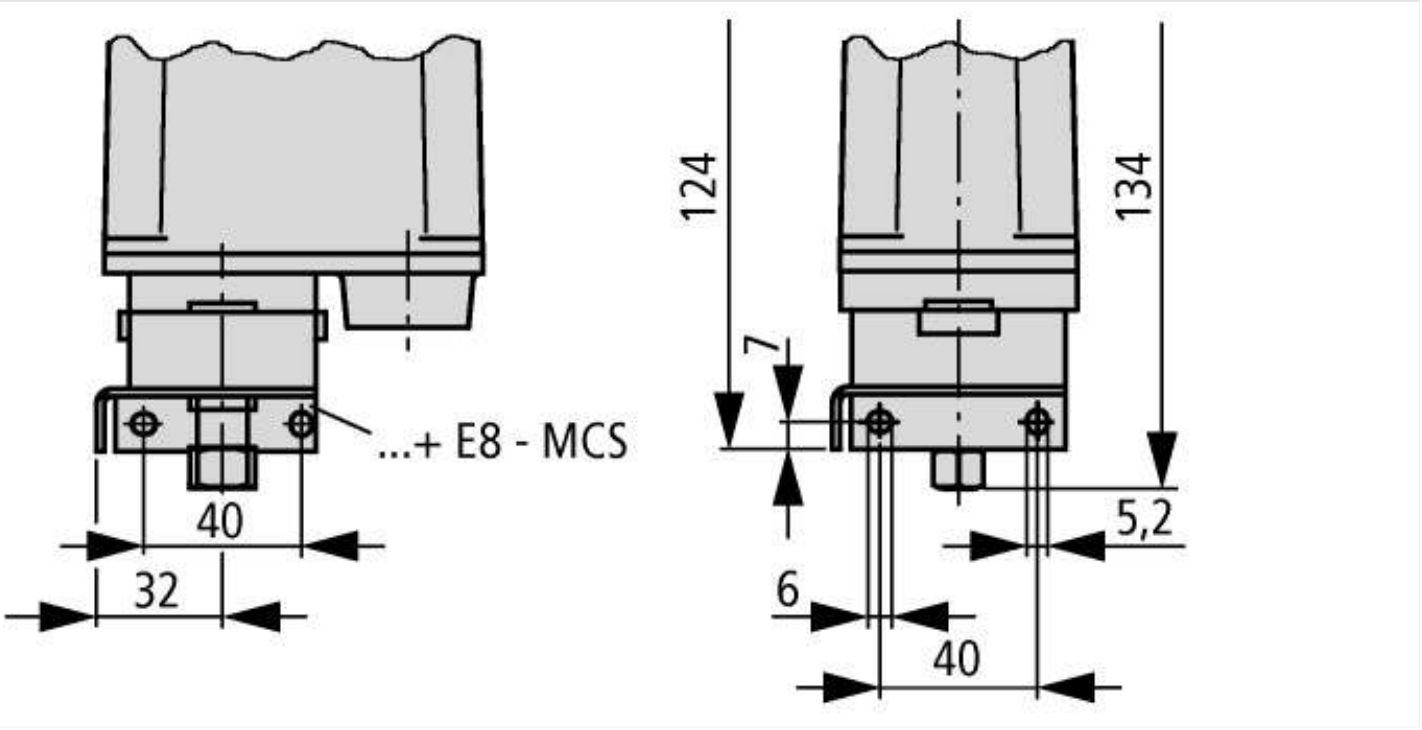

© 05/2021 by Eaton Industries GmbH