LAPP GROUP	**DATA SHEET**	5311 2570
	SKINTOP® MS-HF-M	valid from: 27.07.2016

The SKINTOP® MS-HF-M is a metric cable gland made of brass nickel-plated and polyamide which is flame retardant and non-halogen. It is designed for a universal use, in premises where the subject is human protection, such as office and public buildings, undergrounds tunnels, aeration systems, as well as in premises where the subject is protection of properties values, such as industrial installations, storehouses, supply installations and ship building.



Components:

Gland Body	Brass, nickel plated
Cap nut	Brass, nickel plated
Insert with lamellar cage	Polyamide, Halogen free V0 (acc. to UL 94)
Seal insert for the lamellar cage	Special Elastomer Halogen free, flame retardant
O-Ring:	Special Elastomer Halogen free, flame retardant

Technical features:

Connecting thread	M 12x1,5 up to M 63x1,5 in acc. to DIN 60423, table 1
Functional thread	multi- start- trapezoidal thread
IP- protection	IP 68 - 5 bar/30min in acc. to EN 60 529
Strain relief	cat. A in acc. to EN 50262
Temperature range	Dynamic -25°C up to +100°C Static -40°C up to +100°C

Approval:

Tested in according to:

DIN EN 45545-2: 2013-08
“Railway applications – Fire protection to railway vehicles – Part 2: Requirements for fire behavior of materials and components.“
Test result: Hazard Level **HL3** acc. to DIN EN ISO 4589-2: 2006-06

DIN EN 45545-3: 2013-08
„Railway applications – Fire protection to railway vehicles – Part 3: Fire resistance requirements for fire barriers.“
Classification: **E30** acc. to DIN EN 13501-2: 2010-02

For more information please see our current catalogue.

SKINTOP® MS-HF-M

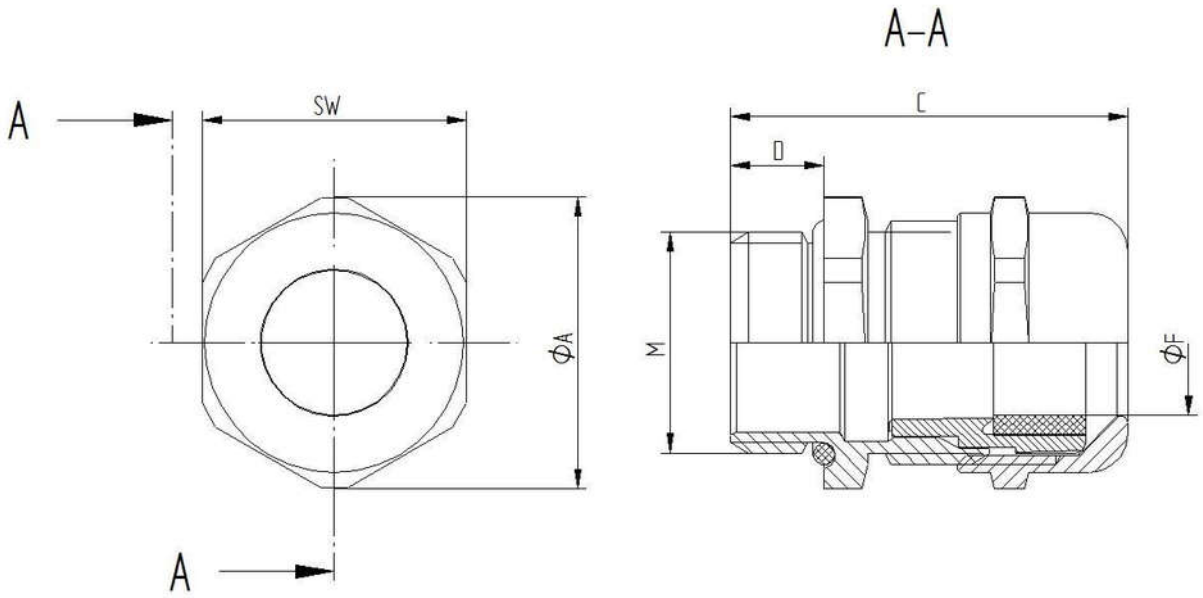

Thread	SW	Ø A	C max.	D	Clamping range ØF	O- Ring	Part No.
M12x1,5	16	17,6	26,5	6,5	3,5-7	9x2	53112570
M16x1,5	20	22	33	7	4,5-10	13x2	53112571
M20x1,5	24	26,4	37	8	7-13	17x2	53112572
M25x1,5	29	31,9	38,5	8	9-17	22x2	53112573
M32x1,5	36	39,6	45,5	9	11-21	28x2	53112574
M40x1,5	45	49,5	48	9	19-28	36x2	53112575
M50x1,5	54	59	55,5	10	27-35	46x2	53112576
M63x1,5	67	73,5	67	15	34-45	57x2	53112577

MAST1 / 28.07.2016 / freigegeben