99 Series - Wall Mount IoT Enclosure

Product Overview

- Rounded design and compact plastic case ideal for use as IoT devices
- Easily attached or detached from wall or post by using the snap-in concealed wall mounting bracket
- PCB mounting pillars moulded into the base of the case, suitable for M2 screws
- Easy to fit, yet secure and tool-less assembly, via snap together construction
- Despite the small size, ample internal space is achieved by the enclosure's screwless construction
- Flat surfaces enable easy customisation for CNC milling and digital printing
- Ideal for small IoT appliances such as LoRaWAN or SIGFOX power-saving communication devices, RFID or GPS gadgets, or network sensors



SPECIFICATION	
Protection class	IP40
Operating temperature	-30°C to +60°C
Material	Weather-resistant ASA UL94HB

Technical Drawing

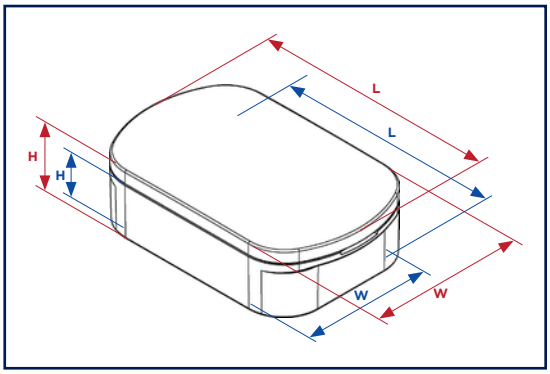

Technical Data

PART NUMBER	EXTERNAL DIMENSIONS			INTERNAL DIMENSIONS			COLOUR
	L	W	H	L	W	H	
CUE9910WH	70	45	22	58.4	39.4	10.9	White
CUE9920WH	70	45	32	58	39.1	20.9	White
CUE9930WH	90	45	22	78.4	39.4	10.9	White
CUE9940WH	90	45	32	78	39.1	20.9	White

Standard Unit Includes

NO.	PART NAME	PIECES	MATERIAL	COLOUR / FINISH
1	Cover	1	Weather-resistant ABS UL94HB	White / Polished
2	Base	1	Weather-resistant ABS UL94HB	White / Polished
3	Wall mounting bracket	1	Weather-resistant ABS UL94HB	White / Polished

Note: Cover includes a protective film on the top face.

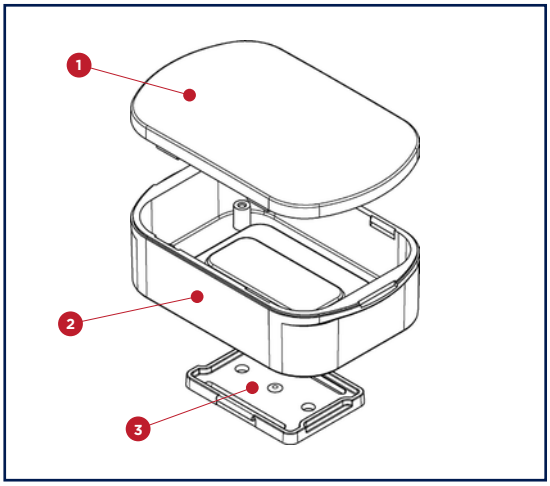

Applications and Industries

Potential uses for the enclosures are as follows: Wall mount enclosure, Small plastic enclosure, Network enclosure, IoT enclosure, Wireless router enclosure, LoRaWAN enclosure and much more.

Enclosures can be customised with CNC milling and digital printing to fit your branding and connectivity requirements.







We operate a constant improvement policy, our products are subject to change without notice.