Mini installation beacon / Permanent Light 216

Permanent Beacon EM 12-48VAC/DC CL

Part No.: 216.400.00



MECHANICAL DATA	
Height	103 mm
Diameter	57 mm
Materials	PA-GF PC
Dome colour	Clear
Housing colour	Black
Protection category	IP65
Connection	Flat plug
Type of fixing	Built-in mounting
Working temperature minimum	-20°C
Working temperature maximum	+50°C
Weight with packaging	67 g
Product weight	45 g

ELECTRICAL DATA	
Operating voltage	12-48V
Operating voltage type	AC/DC
Operating voltage frequency	50Hz
Operating voltage tolerance	+/- 0%
Rated operational voltage	24 VDC
Protection class	Protection class 2
Pollution degree	3 In the connection area: 2

OPTICAL DATA	
Light colour	White
Service life optical	depends on bulb

APPROVAL DATA	
Conforms with CE	Yes
WEEE	Yes
Conforms with ATEX-directive	No
Conforms with CCC	No
Conforms with UL	cULus
UL Type Rating	Type 12
Conforms with FCC	No
Conforms with IC	No
EAC certificate available	Yes
Conforms with AS-I	No
ICAO Certification	No

! For additional installation and mounting information, refer to the appropriate user guide at www.werma.com. This printed copy is for information only and is subject to alteration.

Mini installation beacon / Permanent Light 216

Permanent Beacon EM 12-48VAC/DC CL

Conforms with DNV	No
Conforms with RoHS CN	No
Conforms with VdS	No

DRAWING

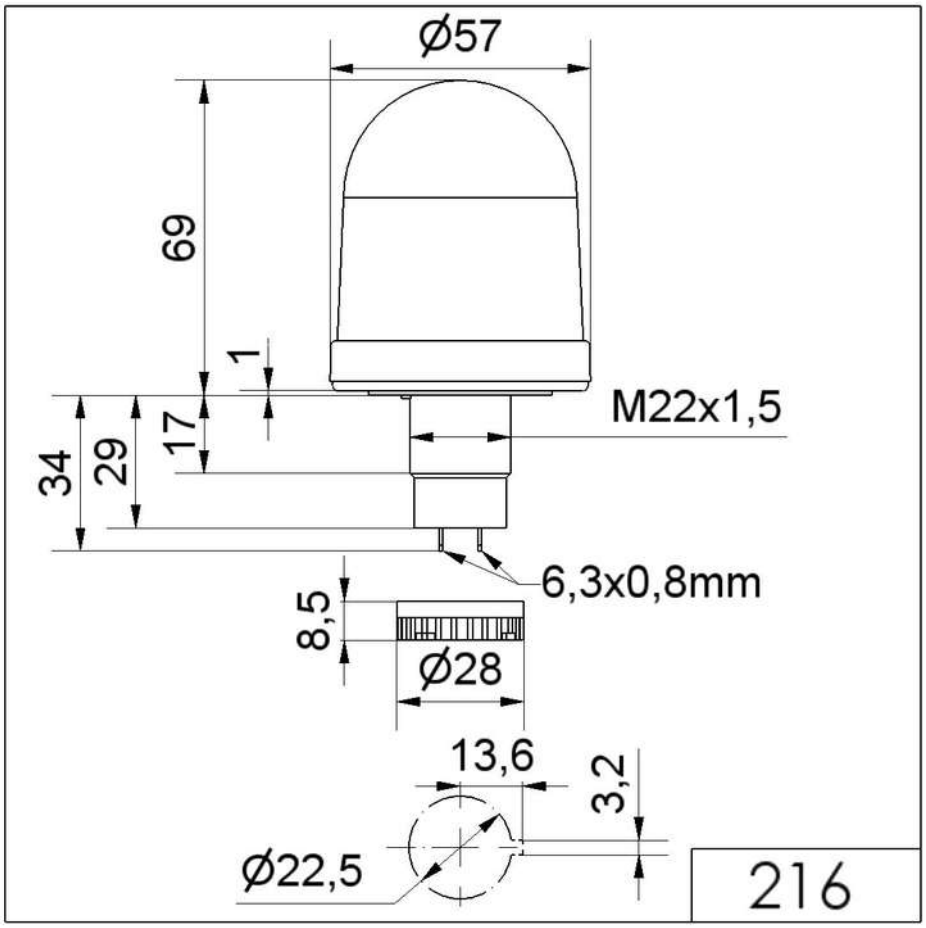

! For additional installation and mounting information, refer to the appropriate user guide at www.werma.com. This printed copy is for information only and is subject to alteration.