ID5046

Inductive sensor

IDE3060-FPKG/US-100-DPS

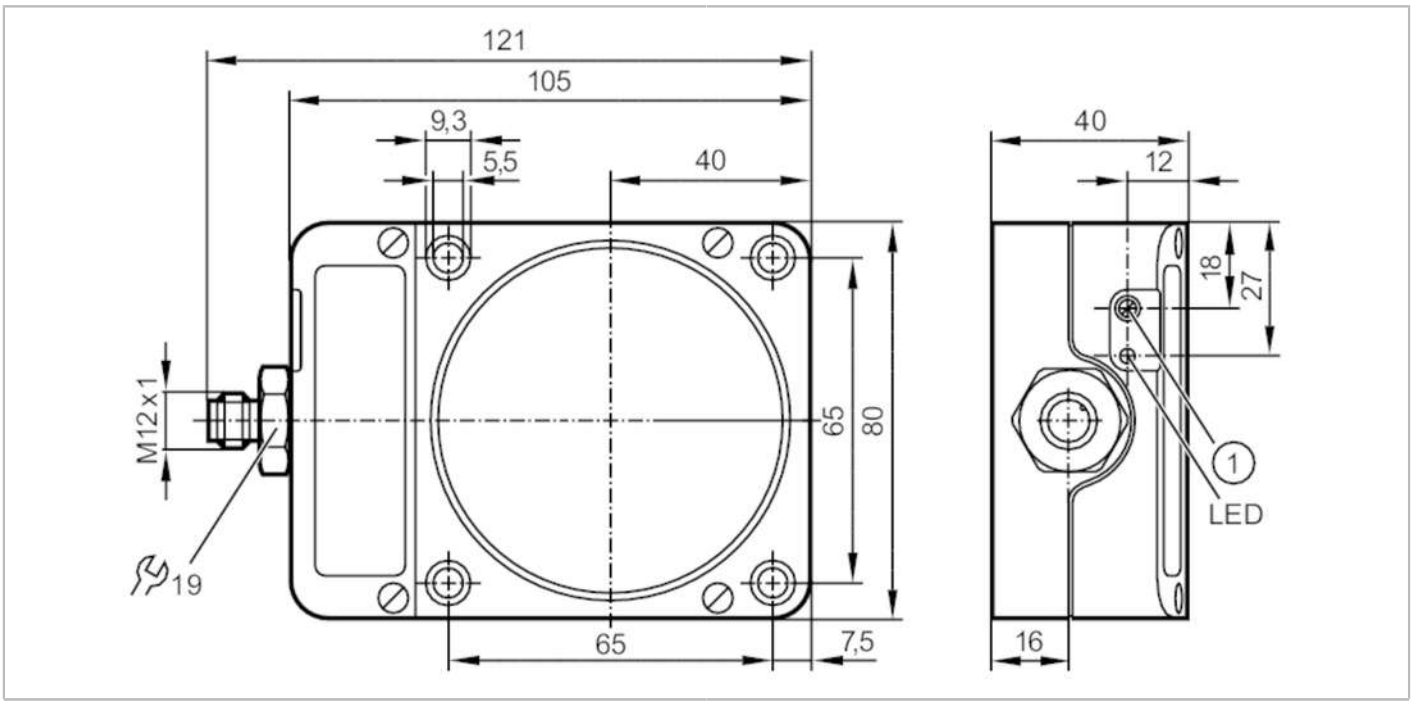

Product characteristics		
Electrical design		PNP
Output function		normally open / normally closed; (selectable)
Sensing range	[mm]	20...60
Housing		rectangular
Dimensions	[mm]	105 x 80 x 40
Electrical data		
Operating voltage	[V]	10...36 DC
Current consumption	[mA]	< 15
Protection class		II
Reverse polarity protection		yes
Outputs		
Electrical design		PNP
Output function		normally open / normally closed; (selectable)
Max. voltage drop switching output DC	[V]	2.5
Permanent current rating of switching output DC	[mA]	250
Switching frequency DC	[Hz]	100
Short-circuit protection		yes
Type of short-circuit protection		pulsed
Overload protection		yes
Detection zone		
Sensing range	[mm]	20...60

ID5046

Inductive sensor

IDE3060-FPKG/US-100-DPS

Sensing range adjustable			yes
Factory setting sensing range	[mm]		60
Real sensing range Sr	[mm]		60 ± 10 %
Operating distance	[mm]		0...48.6
Accuracy / deviations			
Correction factor			steel: 1 / stainless steel: 0.7 / brass: 0.4 / aluminium: 0.3 / copper: 0.2
Hysteresis	[% of Sr]		1...15
Switch point drift	[% of Sr]		-10...10
Operating conditions			
Ambient temperature	[°C]		-25...80
Protection			IP 67
Tests / approvals			
EMC		EN 61000-4-2 ESD	- CD / 8 kV AD
		EN 61000-4-3 HF radiated	3 V/m
		EN 61000-4-4 Burst	2 kV
		EN 61000-4-5 Surge	0,5 kV line to line, Ri: 2 Ohm
		EN 61000-4-6 HF conducted	3 V
		EN 55011	class B
MTTF	[years]		1277
UL approval		Ta	0...40 °C
		Enclosure type	Type 1
		power supply	Hazardous voltage
		File number UL	E174191
Mechanical data			
Weight	[g]		440.5
Housing			rectangular
Mounting			non-flush mountable
Dimensions	[mm]		105 x 80 x 40
Materials			PPE
Displays / operating elements			
Display		switching status	1 x LED, yellow
Accessories			
Items supplied			screwdriver: 1
Remarks			
Remarks			For the normally closed function, connect pin 3 (blue) to terminal 5 in the unit
Pack quantity			1 pcs.

ID5046

Inductive sensor

IDE3060-FPKG/US-100-DPS

Electrical connection - plug

Connector: 1 x M12; coding: A

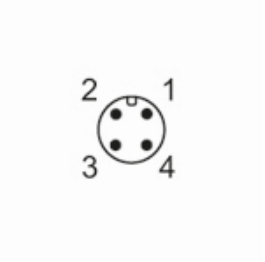

Connection

