ISSUE DATE: 06/26/2014

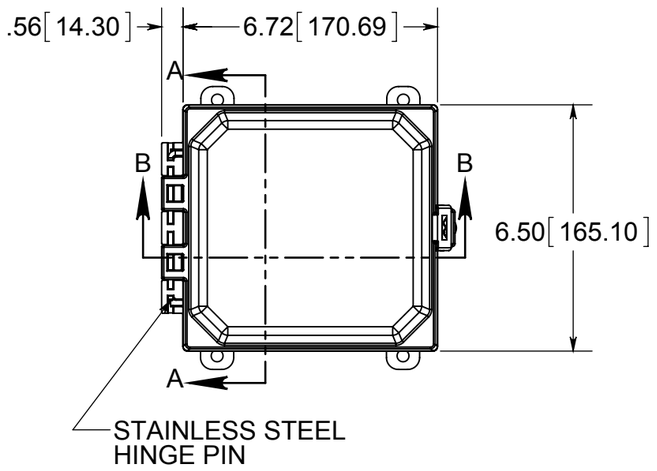

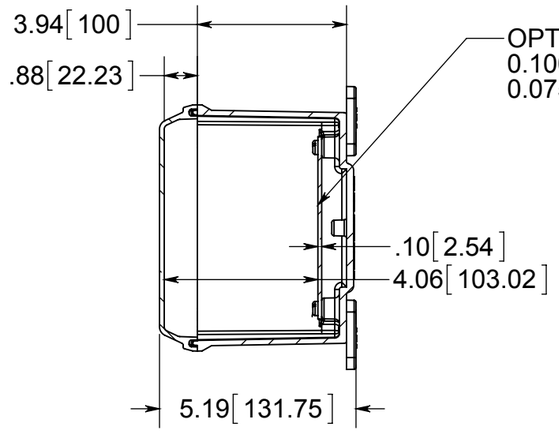

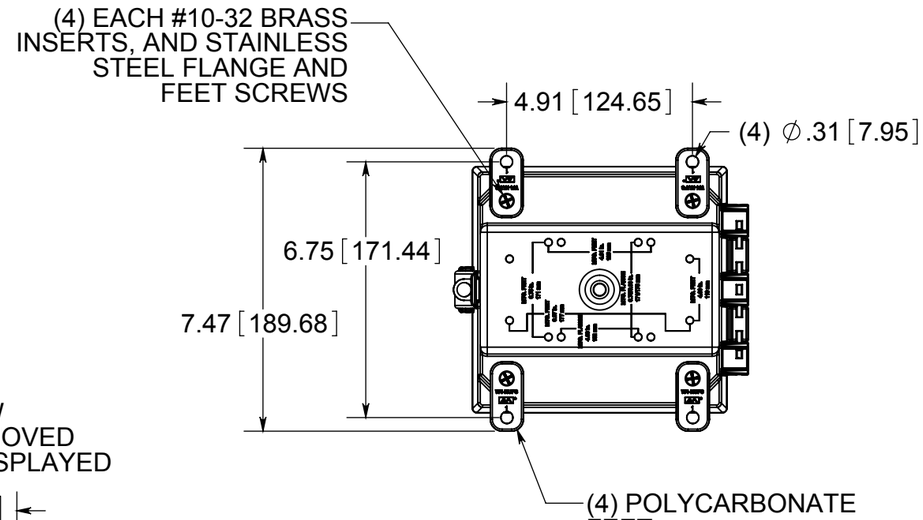

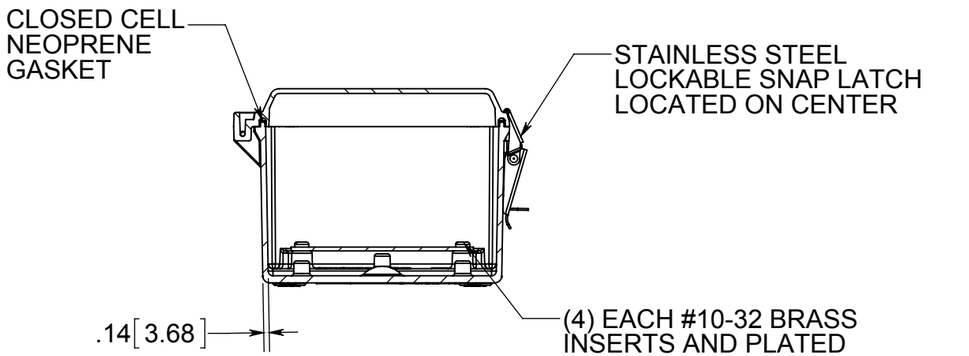

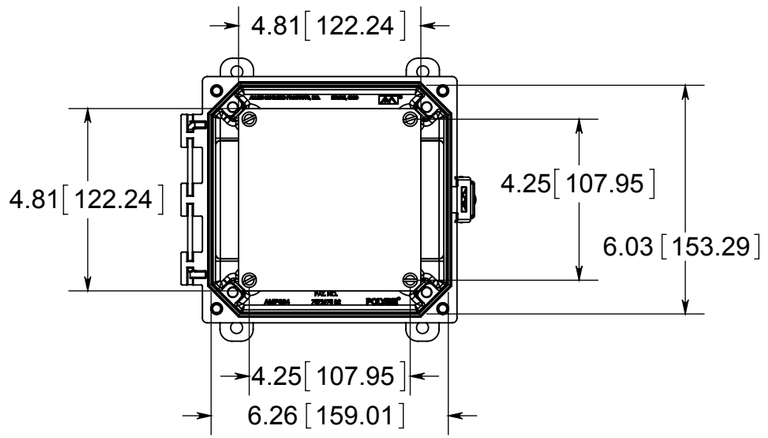

MATERIAL:
BOX- INJECTED POLYCARBONATE
STANDARD COVER- INJECTED POLYCARBONATE
CLEAR COVER- INJECTED POLYCARBONATE

PART No. PCJ664L

for more information visit
www.hammfg.com
Data subject to change without notice

Drawing Not to Scale