SCHAEFFLER



FAG

51205

Axial deep groove ball bearing

Schaeffler ID:
0167150200000

Axial deep groove ball bearing 512, single direction, steel sheet metal cage

Technical information

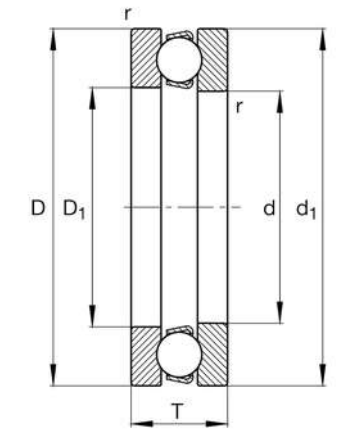

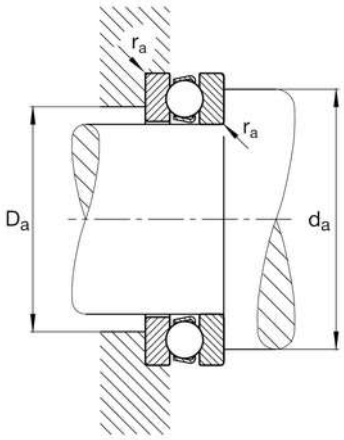

Main Dimensions & Performance Data

d	25 mm	Inner diameter shaft washer
D	47 mm	Outer diameter housing washer
T	15 mm	Height
C_a	26,500 N	Basic dynamic load rating, axial
C_{0a}	50,000 N	Basic static load rating, axial
C_{ua}	2,280 N	Fatigue load limit, axial
n_G	7,500 1/min	Limiting speed
$n_{\vartheta r}$	9,800 1/min	Reference speed
	120 g	Weight

Mounting dimensions

$d_{a\ min}$	38 mm	Minimum diameter shaft shoulder
$D_{a\ max}$	34 mm	Maximum diameter of housing shoulder
$r_{a\ max}$	0.6 mm	Maximum filled radius

Dimensions

r_{min}	0.6 mm	Minimum chamfer dimension
d_1	47 mm	Outer diameter shaft washer

Temperature range

T_{min}	-30 °C	Operating temperature min.
T_{max}	150 °C	Operating temperature max.

Calculation factors

A	0.013	Minimum load factor

The datasheet is only an overview of dimensions and basic load ratings of the selected product. Please always observe all further information and guidelines for this product. For further information you can use the contact form on our website.