Cylindrical roller bearings NUP204-E-XL-TVP2 (Series NUP2..-E)

main dimensions to DIN 5412-1, locating bearing, separable, with cage

The datasheet is only an overview of dimensions and basic load ratings of the selected product. Please always observe all the guidelines in these overview pages. Further information is given on many products under the menu item "Description". You can also order comprehensive information via the Catalogue selection system (https://www.schaeffler.de/content.schaeffler.de/en/news_media/index.jsp) or by telephone on +49 (91 32) 82 - 28 97.

d	20	mm	
D	47	mm	
B	14	mm	
B_3	2,5	mm	
D_1	38,8	mm	
d_1	29,7	mm	
$D_{a\ max}$	41	mm	
$d_{a\ min}$	24	mm	
$d_{c\ min}$	32	mm	
E	41,5	mm	
F	26,5	mm	
$r_{1\ min}$	0,6	mm	
$r_{a\ max}$	1	mm	
r_{min}	1	mm	
m	0,119	kg	Mass
C_r	32500	N	Basic dynamic load rating, radial
C_{0r}	24700	N	Basic static load rating, radial

n_G	19200	1/min	Limiting speed
n_B	12800	1/min	Reference speed
C_{ur}	3900	N	Fatigue limit load, radial

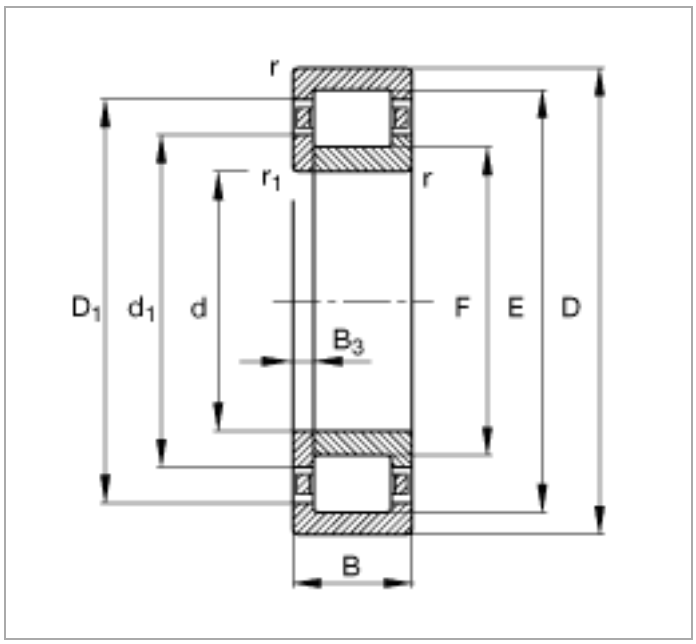

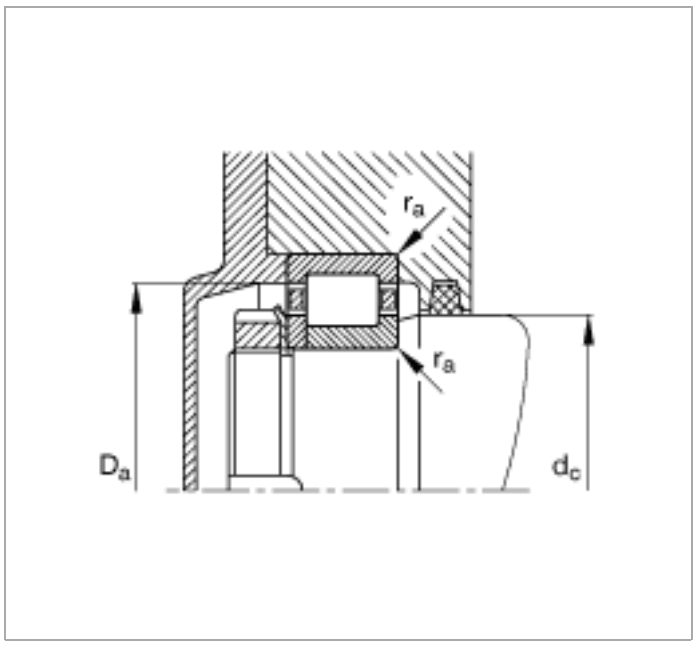

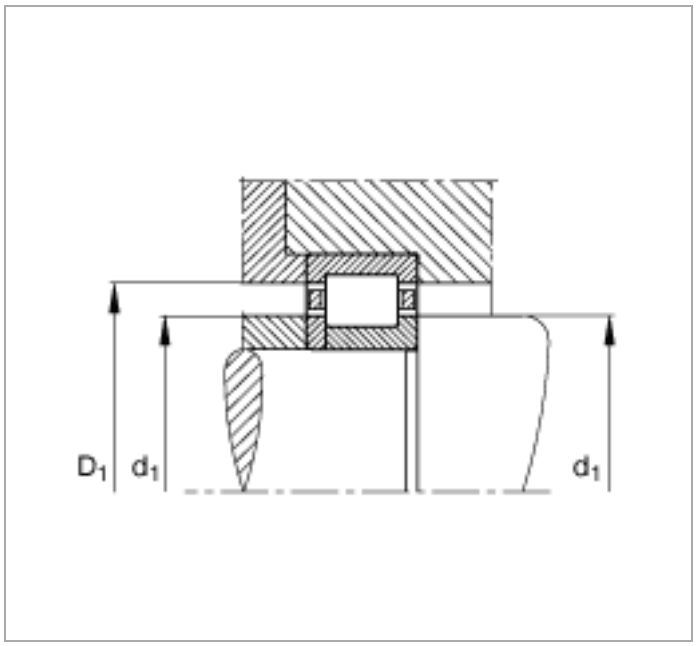
D1
d1
d1