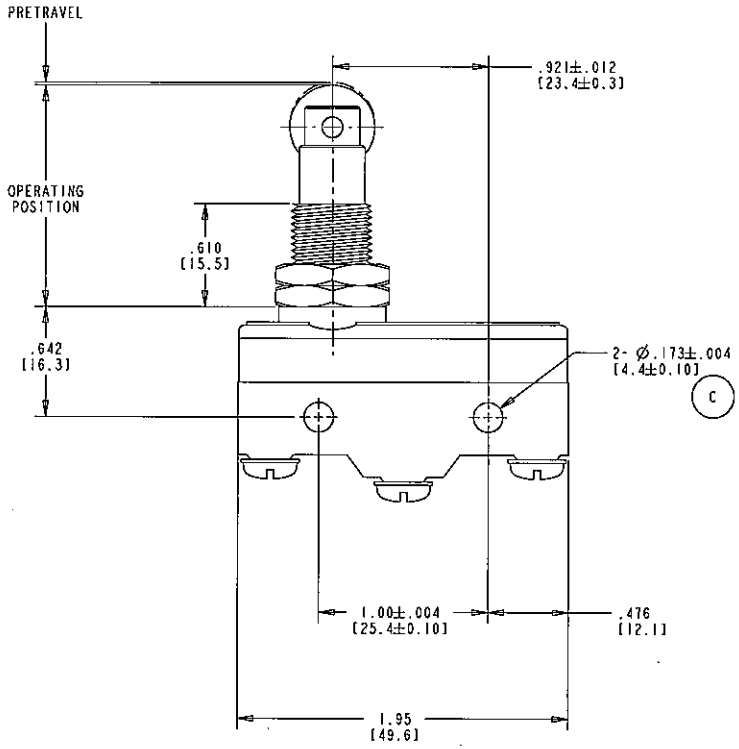

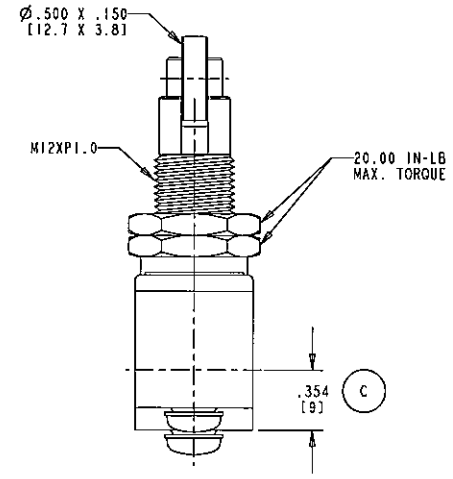

RECOMMENDED MOUNTING:

M4 FASTENER WITH 6.00 IN-LB [7.00 KGF-CM] OF TORQUE MAX.

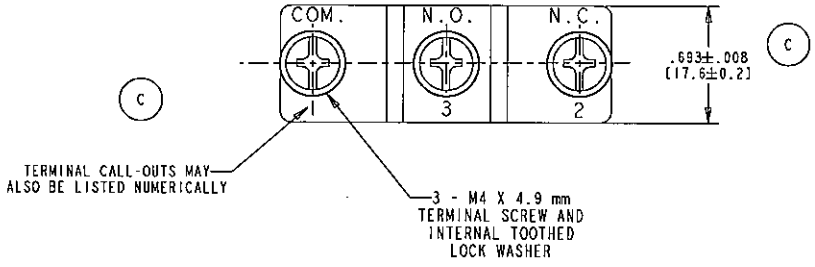

CHARACTERISTICS	
ELECTRICAL RATING	15A 125VAC OR 250VAC UL APPROVED
TERMINAL	SCREW
OPER. FORCE MAX.	350 GMS
RELEASE FORCE MIN.	114 GMS
PRETRAVEL MAX.	.016 [0.4 mm]
OVERTRAVEL MIN.	.140 [3.58 mm]
MOVE. DIFF. MAX.	.002 [0.05 mm]
OPERATING POSITION	1.268 TO 1.362 [32.2 TO 34.6 mm]

C	12934	01-Jun-05	JED	SG
REV	ECN NO.	DATE	PREP	APVD

DWN: JED
APVD: SB
DATE: 25-May-04
THIRD ANGLE PROJECTION

THE CONFIDENTIAL AND PROPRIETARY INFORMATION CONTAINED IN THIS DOCUMENT IS OWNED BY CHERRY ELECTRICAL PRODUCTS, A DIVISION OF THE CHERRY CORPORATION WHO MUST GIVE WRITTEN PERMISSION BEFORE THE DOCUMENT OR INFORMATION CAN BE COPIED, DISCLOSED OR USED IN ANY WAY.

TOLERANCE UNLESS SPECIFIED

X.XX	X.XXX	ANGLES
± 0.02	± 0.015	± 5.0°

PROJECT / ESA

CHERRY ELECTRICAL PRODUCTS
NAME & DESCRIPTION

11200 88TH AVENUE
PLEASANT PRAIRIE, WI 53158

SWITCH

C | ITEM NO. GPTCRH01

SCALE: 2:1 | SH 1 OF 1

ORIGINAL ON PRO/E