SCHAEFFLER

Self-aligning ball bearings 126-TVH (Series 12)

main dimensions to DIN 630

The datasheet is only an overview of dimensions and basic load ratings of the selected product. Please always observe all the guidelines in these overview pages. Further information is given on many products under the menu item "Description". You can also order comprehensive information via the Catalogue selection system (https://www.schaeffler.de/content.schaeffler.de/en/news_media/index.jsp) or by telephone on +49 (91 32) 82 - 28 97.

d	6	mm	
D	19	mm	
B	6	mm	
D_1	14,7	mm	
d_1	10,1	mm	
$D_{a\ max}$	16,6	mm	
$d_{a\ min}$	8,4	mm	
$r_{a\ max}$	0,3	mm	
r_{min}	0,3	mm	
m	0,0090	kg	Mass

C_r	2600 N	Basic dynamic load rating, radial
C_{0r}	480 N	Basic static load rating, radial
C_{ur}	30,5 N	Fatigue limit load, radial
n_G	41500 1/min	Limiting speed
$n_{\vartheta r}$	30500 1/min	Reference speed
e	0,35	
Y_1	1,82	
Y_2	2,82	
Y_0	1,91	

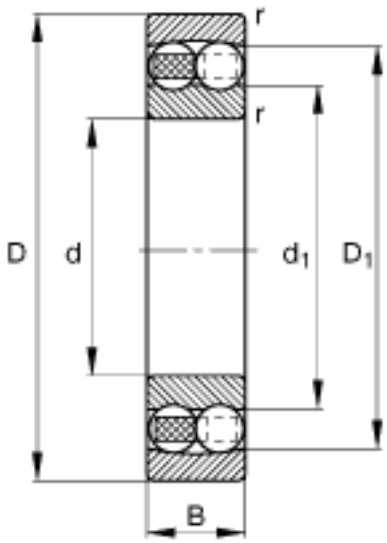

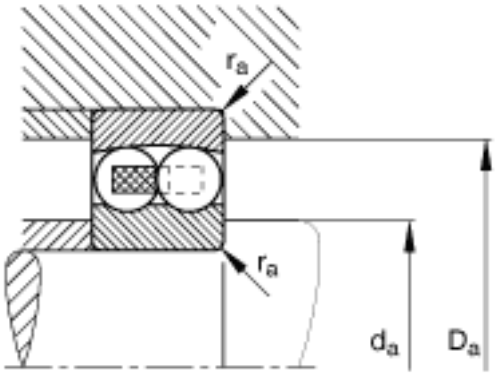
r_a
r_a
d_a
D_a