Your Expert Partner for **Human Machine Interfaces**

Blind plug

Distribution by
Rs-online

61-9452.0



https://rs-online.eao.com/component/61-9452.0...

Your product:



61-9452.0
Blind plug

FRONT

Colour: Black

MOUNTING

Mounting cut-out: 21 mm x 27 mm

MECHANICAL CHARACTERISTICS

Weight: 0.007 kg

OTHER

Short Description: Blind plug, 30 mm x 24 mm, 21 mm x 27 mm, Plastic, Black

Titel Accessory: Blind plug

Dimension: 30 mm x 24 mm

Material: Plastic

Mounting cut-outs:

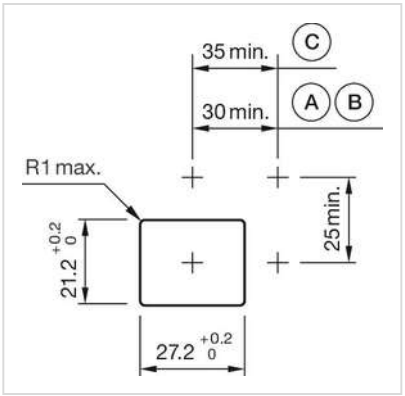

A = Solder/Plug-in terminal 2.8 mm x 0.5 mm
B = Solder terminal
C = Screw terminal

Dimension drawings:

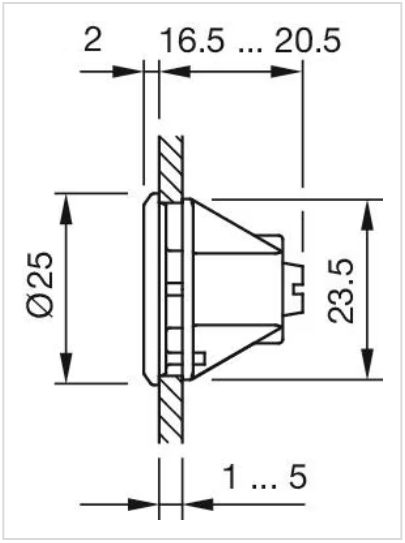

for Part No. 61-9453.0