IM5040

Inductive sensor

IME3015-FNKG/NPT RT

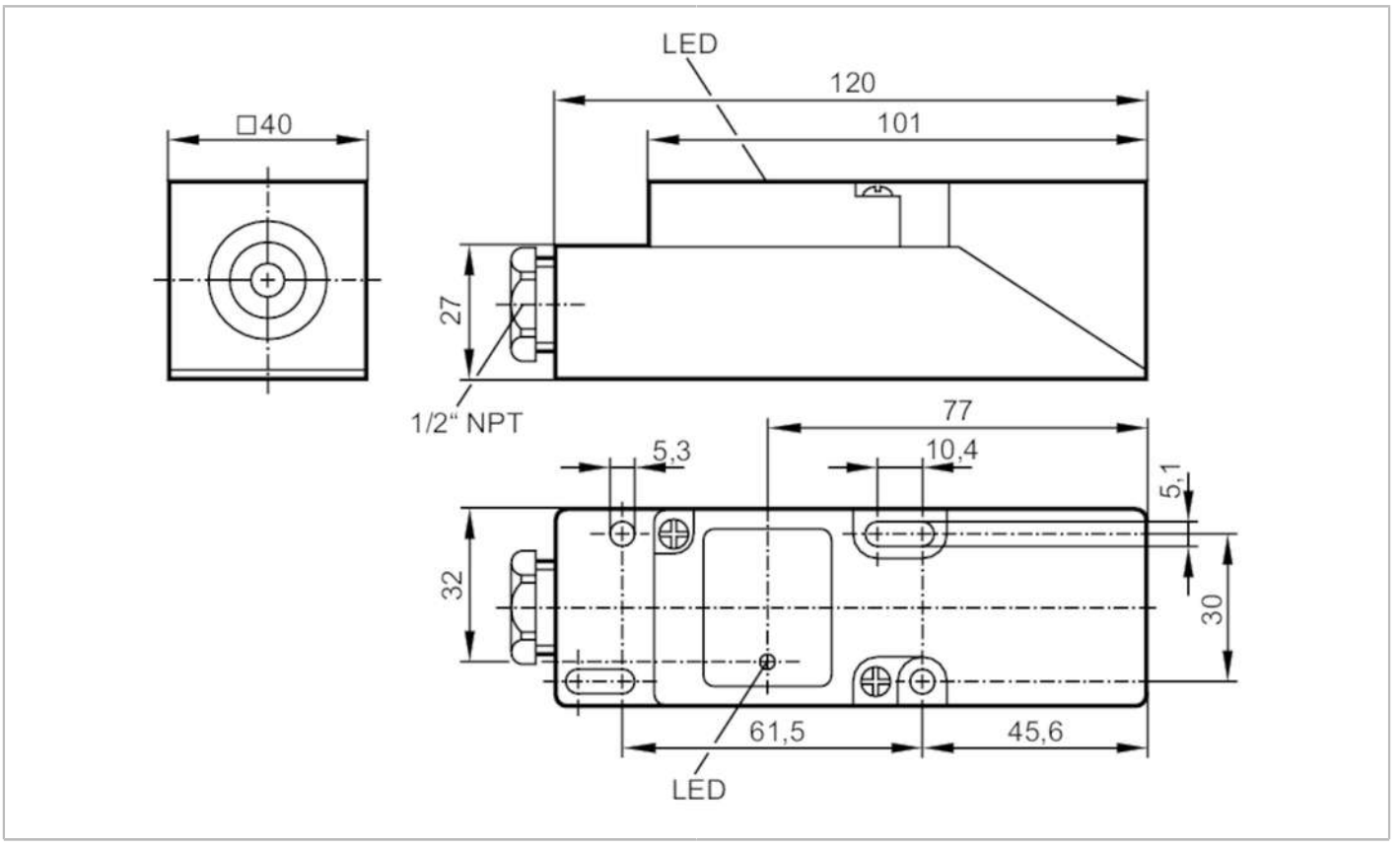

Product characteristics		
Electrical design		NPN
Output function		normally open / normally closed; (selectable)
Sensing range	[mm]	15
Housing		rectangular
Dimensions	[mm]	40 x 40 x 120
Electrical data		
Operating voltage	[V]	10...36 DC
Current consumption	[mA]	15; (24 V)
Protection class		II
Reverse polarity protection		yes
Outputs		
Electrical design		NPN
Output function		normally open / normally closed; (selectable)
Max. voltage drop switching output DC	[V]	2.5
Permanent current rating of switching output DC	[mA]	250
Switching frequency DC	[Hz]	350
Short-circuit protection		yes
Type of short-circuit protection		pulsed

IM5040

Inductive sensor

IME3015-FNKG/NPT RT

Overload protection		yes	
Detection zone			
Sensing range	[mm]	15	
Real sensing range Sr	[mm]	15 ± 10 %	
Operating distance	[mm]	0...12.1	
Accuracy / deviations			
Correction factor		steel: 1 / stainless steel: 0.7 / brass: 0.4 / aluminium: 0.3 / copper: 0.2	
Hysteresis	[% of Sr]	1...15	
Switch point drift	[% of Sr]	-10...10	
Operating conditions			
Ambient temperature	[°C]	-25...80	
Protection		IP 65	
Tests / approvals			
EMC		EN 60947-5-2	
		EN 55011	class B
MTTF	[years]	1844	
Mechanical data			
Weight	[g]	195	
Housing		rectangular	
Mounting		flush mountable	
Dimensions	[mm]	40 x 40 x 120	
Materials		PPE modified	
Displays / operating elements			
Display		switching status	1 x LED, red
Remarks			
Remarks		5 positions of the active zone possible	
Pack quantity		1 pcs.	
Electrical connection			

terminals: ...2.5 mm²; Cable sheath: Ø 7...13 mm

Connection

