Features

- "LT" suffix valves are built to control cryogenic fluids, including liquid nitrogen (-320˚F/-194˚C), liquid argon (-303˚F/-184˚C), and liquid oxygen (-297˚F/-181˚C)
- All suffix "LT" valves are degreased, cleaned, tested free of moisture, and black light tested for hydrocarbons
- Liquid CO_2 valves are suitable for remote mounting or for direct mounting to the refrigerated component by using four-hole bracket, provided



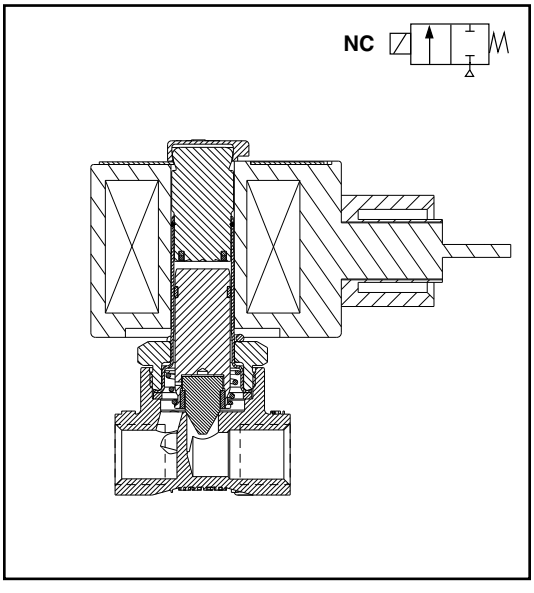

Construction

Valve Parts in Contact with Fluids	
Body: Cryogenic Valves	Brass
Body: LCO_2 Valves	Nickel-Plated Brass
Seals	PTFE and/or Clad Copper/UR
Disc	PTFE/UR (8264 only)
Core and Plugnut	430F Stainless Steel or 49 FM Alloy
Core Spring	302 Stainless Steel
Shading Coil	Copper
Seats	Stainless Steel (8264 Series)

Electrical

Standard Coil and Class of Insulation	Watt Rating and Power Consumption				Spare Coil Part Number			
		AC			General Purpose		Explosionproof	
	DC Watts	Watts	VA Holding	VA Inrush	AC	DC	AC	DC
F	11.6	10.1	23	47	238610	238710	238614	238714
F	18.6	13.8	27	43	238210	238310	238214	238314
F	-	17.1	34	64	238610	-	238614	-
H	40.6	17.1	34	64	238810	238910	238814	238914

Standard Voltages: 24, 120, 240, 480 volts AC, 60 Hz. 6, 12, 24, 120, 240 volts DC. Must be specified when ordering. Other voltages are available when required.

Solenoid Enclosures

Standard: Watertight, Types 1, 2, 3, 3S, 4, and 4X.

Optional: Explosionproof and Watertight, Types 3, 3S, 4, 4X, 6, 6P, 7, and 9. (To order, add prefix "EF" to catalog number.)

See Optional Features Section for other available options.

Nominal Fluid Temp. Ranges

AC Cryogenic Valves: -320˚F to 150˚F (-196˚C to 66˚C)
DC Cryogenic Valves: -320˚F to 120˚F (-196˚C to 49˚C)
All Liquid CO_2 Valves: -75˚F to 120˚F (-59˚C to 49˚C)
Refer to Engineering Section for details.

Nominal Ambient Temp. Ranges

AC Construction: -40˚F to 125˚F (-40˚C to 52˚C)
8262/8263 Series: -40˚F to 131˚F (-40˚C to 55˚C)
DC Construction: -40˚F to 104˚F (-40˚C to 40˚C)
8262/8263 Series: -40˚F to 131˚F (-40˚C to 55˚C)
Refer to Engineering Section for details.

Approvals

CSA certified. UL listed as indicated.
Meets applicable CE directives.
Refer to Engineering Section for details.

Specifications (English units)

Pipe Size (in)	Orifice Size (in)	Cv Flow Factor	Operating Pressure Differential (psi)				Catalog Number	Const. Ref.	UL Listed ③	Watt Rating/ Class of Coil Insulation	
			Min.	Max. AC ②	Max. DC @ 104˚F	Max. DC @ 131˚F				AC	DC
CRYOGENIC SERVICE - NORMALLY CLOSED (Closed when de-energized)											
1/8	1/8	0.35	0	155	75	68	8263H240LT	1	●	10.1/F	11.6/H
1/8	1/8	0.35	0	250	130	120	8262H105LT	1	●	17.1/F	22.6/H
1/4	1/8	0.35	0	155	75	68	8262H232LT	1	●	10.1/F	11.6/H
1/4	1/8	0.35	0	250	130	120	8262H110LT	1	●	17.1/F	22.6/H
1/4	7/32	0.73	0	48	30	22	8262H208LT	1	●	10.1/F	11.6/H
1/4	7/32	0.73	0	100	42	40	8262H114LT	1	●	17.1/F	22.6/H
1/4	9/32	0.88	0	40	18	14	8262H210LT	1	●	10.1/F	11.6/H
1/4	9/32	0.88	0	58	27	18	8262H212LT	1	●	17.1/F	22.6/H
3/8	1/8	0.35	0	155	75	68	8263H232LT	2	●	10.1/F	11.6/H
3/8	1/8	0.35	0	250	130	120	8263H115LT	2	●	17.1/F	22.6/H
3/8	7/32	0.73	0	48	30	22	8263H124LT	2	●	10.1/F	11.6/H
3/8	7/32	0.73	0	90	42	40	8263H206LT	2	●	17.1/F	22.6/H
3/8	9/32	0.88	0	40	18	14	8263H125LT	2	●	10.1/F	11.6/H
3/8	9/32	0.88	0	58	27	18	8263H210LT	2	●	17.1/F	22.6/H
1/2	5/8	3.8	0	90	50	-	8222G002LT	3	-	17.1/H	40.6/H
3/4	3/4	5.8	0	90	50	-	8222G003LT	3	-	17.1/H	40.6/H
1	1	13.5	5	200	100	-	8210G078LT	4	-	17.1/F	40.6/H
1 1/4	1 1/8	15	5	200	100	-	8210G080LT	5	-	17.1/F	40.6/H
1 1/2	1 1/4	22.5	5	200	100	-	8210G082LT	6	-	17.1/F	40.6/H
LIQUID CO_2 SERVICE - NORMALLY CLOSED (Closed when de-energized)											
1/8	3/64	.06	0	1000	1000	-	8264G009 ①	7	-	13.8/F	18.6/F
1/8	3/32	.20	0	300	300	-	8264G010 ①	7	-	13.8/F	18.6/F

① Must use tubing with an I.D. no larger than the outlet port orifice to locate the refrigeration point downstream and to prevent freezing of the CO_2 inside the valve.
② For 8262 & 8263 Series, AC pressure ratings are at 131˚F ambinet; for all other series, AC pressure ratings are at 125˚F. ③ ● General purpose valve.

Specifications (Metric units)

Pipe Size (in)	Orifice Size (mm)	Kv Flow Factor (m^3/hr)	Operating Pressure Differential (bar)				Catalog Number	Const. Ref.	UL Listed ③	Watt Rating/ Class of Coil Insulation	
			Min.	Max. AC ②	Max. DC @ 40˚C	Max. DC @ 55˚C				AC	DC
CRYOGENIC SERVICE - NORMALLY CLOSED (Closed when de-energized)											
1/8	3.2	0.30	0	11	5	5	8263H240LT	1	●	10.1/F	11.6/H
1/8	3.2	0.30	0	17	9	8	8262H105LT	1	●	17.1/F	22.6/H
1/4	3.2	0.30	0	11	5	5	8262H232LT	1	●	10.1/F	11.6/H
1/4	3.2	0.30	0	17	9	8	8262H110LT	1	●	17.1/F	22.6/H
1/4	5.6	0.63	0	3	2	2	8262H208LT	1	●	10.1/F	11.6/H
1/4	5.6	0.63	0	7	3	3	8262H114LT	1	●	17.1/F	22.6/H
1/4	7.0	0.76	0	3	1	1	8262H210LT	1	●	10.1/F	11.6/H
1/4	7.0	0.76	0	4	2	1	8262H212LT	1	●	17.1/F	22.6/H
3/8	3.2	0.30	0	11	5	5	8263H232LT	2	●	10.1/F	11.6/H
3/8	3.2	0.30	0	17	9	8	8263H115LT	2	●	17.1/F	22.6/H
3/8	5.6	0.63	0	3	2	2	8263H124LT	2	●	10.1/F	11.6/H
3/8	5.6	0.63	0	6	3	3	8263H206LT	2	●	17.1/F	22.6/H
3/8	7.0	0.76	0	3	1	1	8263H125LT	2	●	10.1/F	11.6/H
3/8	7.0	0.76	0	4	2	1	8263H210LT	2	●	17.1/F	22.6/H
1/2	16	3.2	0	6	3	-	8222G002LT	3	-	17.1/H	40.6/H
3/4	19	5	0	6	3	-	8222G003LT	3	-	17.1/H	40.6/H
1	25	11.6	5	14	7	-	8210G078LT	4	-	17.1/F	40.6/H
1 1/4	29	13	5	14	7	-	8210G080LT	5	-	17.1/F	40.6/H
1 1/2	32	19	5	14	7	-	8210G082LT	6	-	17.1/F	40.6/H
LIQUID CO_2 SERVICE - NORMALLY CLOSED (Closed when de-energized)											
1/8	1	.05	0	69	69	-	8264G009 ①	7	-	13.8/F	18.6/F
1/8	2	.17	0	21	21	-	8264G010 ①	7	-	13.8/F	18.6/F

① Must use tubing with an I.D. no larger than the outlet port orifice to locate the refrigeration point downstream and to prevent freezing of the CO_2 inside the valve.
② For 8262 & 8263 Series, AC pressure ratings are at 55˚C ambinet; for all other series, AC pressure ratings are at 52˚C. ● General purpose valve.

Dimensions inches (mm)

Const. Ref.		H	K	L	P	W
1	in	3.16	1.81	1.56	2.81	1.95
	mm	77	46	40	71	50
2	in	3.23	1.81	1.88	2.81	1.95
	mm	82	46	48	71	50
3	in	4.67	3.15	2.75	4.11	1.95
	mm	119	80	70	104	50
4	in	5.82	3.22	3.75	4.19	4.44
	mm	148	82	95	106	113
5	in	5.82	3.22	3.66	4.19	4.86
	mm	148	82	93	106	123
6	in	6.29	3.37	4.38	4.34	5.81
	mm	160	86	111	110	148
7	in	2.82	1.27	Ø1.12	2.13	1.69
	mm	72	32	Ø28	54	43
IMPORTANT: Valves may be mounted in any position.						
8222G002LT 8222G003LT	Mount vertical and upright.					

Const. Ref. 1, 2

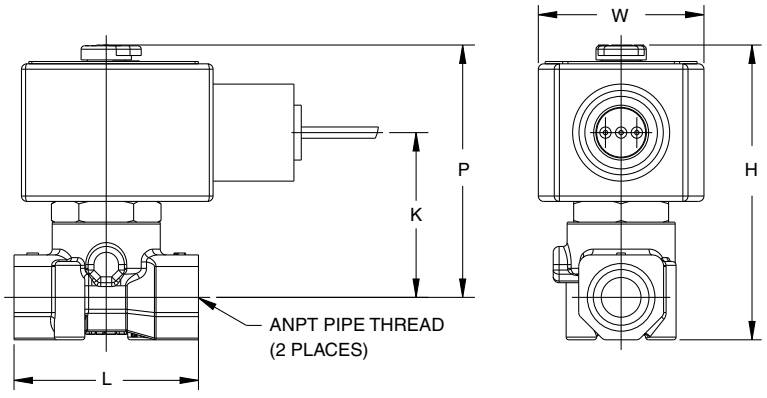

Const. Ref. 3

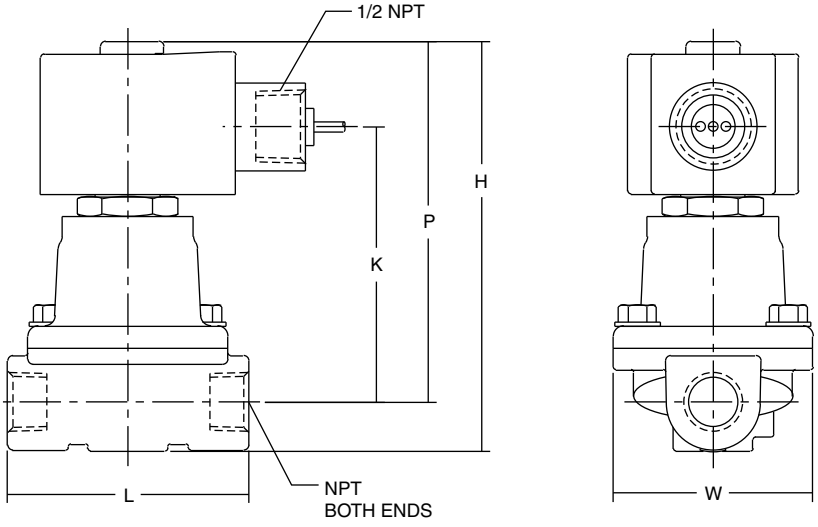

SPECIAL SERVICE VALVES

Dimensions inches (mm)

Const. Ref. 4, 5, 6

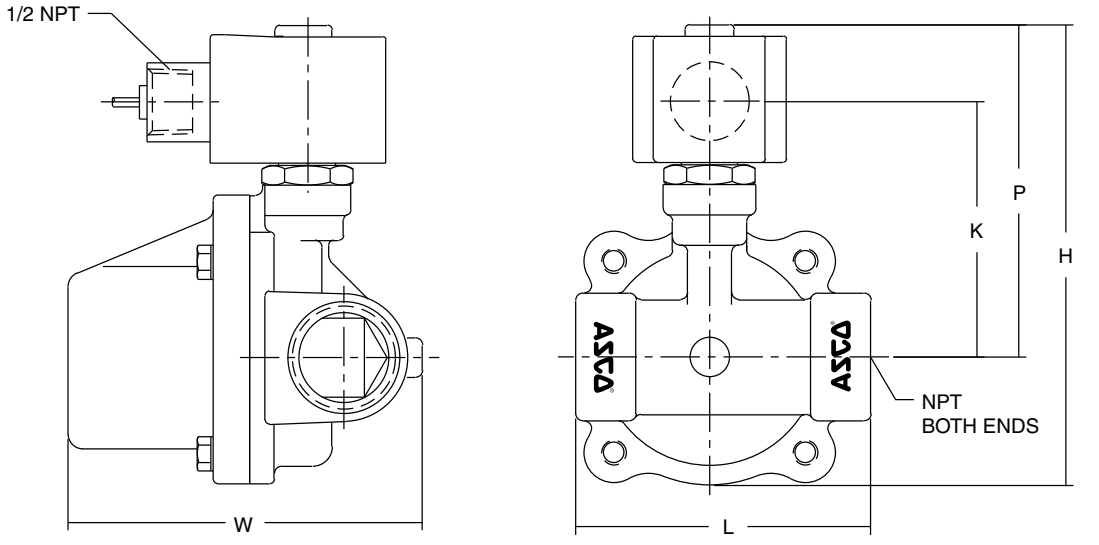

Const. Ref. 7

