PRODUCT DETAILS

ARTICLE: 16327

WHEEL E 100X40/40 ROLLER BEAR. SWIVEL FORK M22



Wheel series E

Wheels with elastic solid rubber tyre bonded to die-cast aluminum centre.
Available with ball bearings or roller bearings.
Wheel fitted with standard roller bearing.

Castor series M22

M22 series, Medium-light pressed steel fork assemblies; swivel version has double ball raceways. Zincplated.

Technical data

Wheel diameter	D	100 mm
Tyre width	E	40,0 mm
Bore diameter	d	15 mm
Weight article		1,030 kg
Hub width	L	40 mm
Overall height	H	128 mm
Top plate outer dimensions	AxB	102x83 mm
Bolt hole spacing	axb	76x55 mm
Bolt hole spacing	axb	80x60 mm
Fixing bolt diameter	g	M8
Offset	F	37 mm
Fork width	U	40 mm
Load Capacity		120 kg

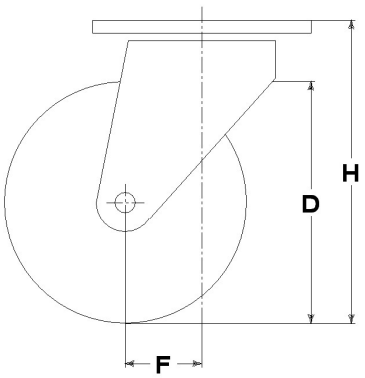

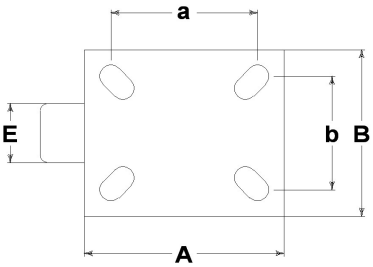

Related Articles

Spare part wheel: 2050
Version with trailing brake: 16327FR

GENERAL INFORMATION / RECOMMENDATIONS AND WARNINGS
The cited text and the complete catalogue in their most up-dated versions are available in the OEM's website page www.lagspa.it/downloads. The dimensions, descriptions, specifications and illustrations herein are indicative and subject to variations without notice. The fact that products are illustrated herein does not necessarily imply they are available from stock nor does it place us under any obligation to supply them.
Tests carried out refer to the original products with original accessories: the replacement of one of the components with others of different manufacture might prevent the same results from being achieved and will automatically invalidate any guarantee. Please contact our technical service concerning any special application.