Brand of NTN corporation

Technical data

2202EEG15

Double-row self-aligning ball bearings



Self-aligning ball bearing, polyamide cage, friction seals on both sides

VISUAL (S)

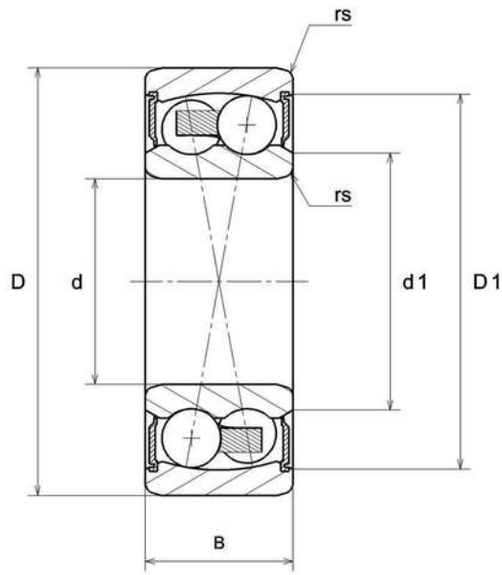

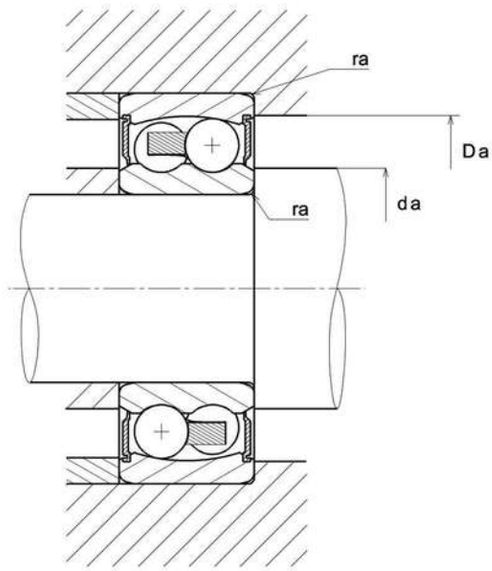

NTN Europe
1 rue des Usines · BP 2017 · 74010 Annecy Cedex · France · Tel. +33 (0)4 50 65 30 00
S.A. au capital de 322 639 919 € · RCS ANNECY B 325 821 072 · Id. Fiscale : FR 48 325 821 072
SIRET 325 821 072 00015 · Code APE 2815 Z · Code NACE 28.15

2202EEG15
Double-row self-aligning ball bearings

PRODUCT DEFINITION	
Brand	SNR
d - Internal diameter	15 mm
D - External diameter	35 mm
B - Bearing/Inner ring width	14 mm
d1 - External diameter inner ring	19,1 mm
D1 - Inner diameter outer ring	28,8 mm
rs - Min fillet radius	0,6 mm
Radial clearance class	CN
Precision class	P0
Mass	0,06 kg

PRODUCT PERFORMANCE	
C - Dynamic load	7,5 kN
C0 - Static load	1,75 kN
Cu - Fatigue limit load	0,08 kN
e - Coefficient	0.34
Y0 - Static axial load coefficient	1.95
Y1 - Lower axial load coefficient	1.86
Y2 - Upper axial load coefficient	2.89
Nlim - Mechanical Limit Speed	13000 tr/min
Tmin - Min operating temperature	-20 °C
Tmax - Max operating temperature	120 °C

BEARING FREQUENCIES	
BPFO - Characteristic outer ring frequency (60 rpm)	3.89 Hz

BEARING FREQUENCIES	
BPFI - Characteristic inner ring frequency (60 rpm)	6.11 Hz
FTF - Characteristic cage frequency (60 rpm)	0.389 Hz
BSF - Characteristic rolling element frequency (60 rpm)	4.179 Hz

ABUTMENT	
da min - Min shoulder diameter IR	19 mm
Da max - Max shoulder diameter OR	31 mm
ra max - Max shaft & housing fillet radius	0,6 mm