Installation / LED/Buzzer 150

# Siren BWM Contin. tone 48VAC



**Part No.: 153.000.66**

| MECHANICAL DATA | |
|---|---|
| Length | 85 mm |
| Width | 85 mm |
| Height | 72 mm |
| Materials | PC<br>PP-GF |
| Housing colour | Black |
| Protection category | IP66 |
| Connection | Screw terminals |
| cross-sectional area maximum | 1,50mm² / 16AWG |
| Cable entry | Membrane grommet |
| Cable entry minimum | d = 1 mm |
| Cable entry maximum | d = 8 mm |
| Type of fixing | Base mounting<br>Wall mounting |
| Working temperature minimum | -25°C |
| Working temperature maximum | +50°C |
| Weight with packaging | 179 g |
| Product weight | 149 g |

| ELECTRICAL DATA | |
|---|---|
| Operating voltage | 48V |
| Operating voltage type | AC |
| Operating voltage frequency | 50Hz |
| Operating voltage tolerance | +/- 10% |
| Rated operational voltage | 48 VAC |
| Rated operational current | 150 mA |
| Rated inrush current | 7.000 mA |
| Protection class | Protection class 2 |
| Pollution degree | 3 |

| ACUSTICAL DATA | |
|---|---|
| Volume (max) at 1m distance | 105,0 dB (A) |
| Number of tones | 1 tone |
| Acoustic service life | 5,000 h minimum |

| APPROVAL DATA | |
|---|---|
| Conforms with CE | Yes |
| WEEE | Yes |
| Conforms with ATEX-directive | No |
| Conforms with CCC | No |

! For additional installation and mounting information, refer to the appropriate user guide at www.werma.com. This printed copy is for information only and is subject to alteration.

Installation / LED/Buzzer 150

# Siren BWM Contin. tone 48VAC

| | |
|---|---|
| Conforms with UL | No |
| Conforms with FCC | No |
| Conforms with IC | No |
| EAC certificate available | Yes |
| Conforms with AS-I | No |
| ICAO Certification | No |
| Conforms with DNV | No |
| Conforms with RoHS CN | No |
| Conforms with VdS | No |

**DRAWING**

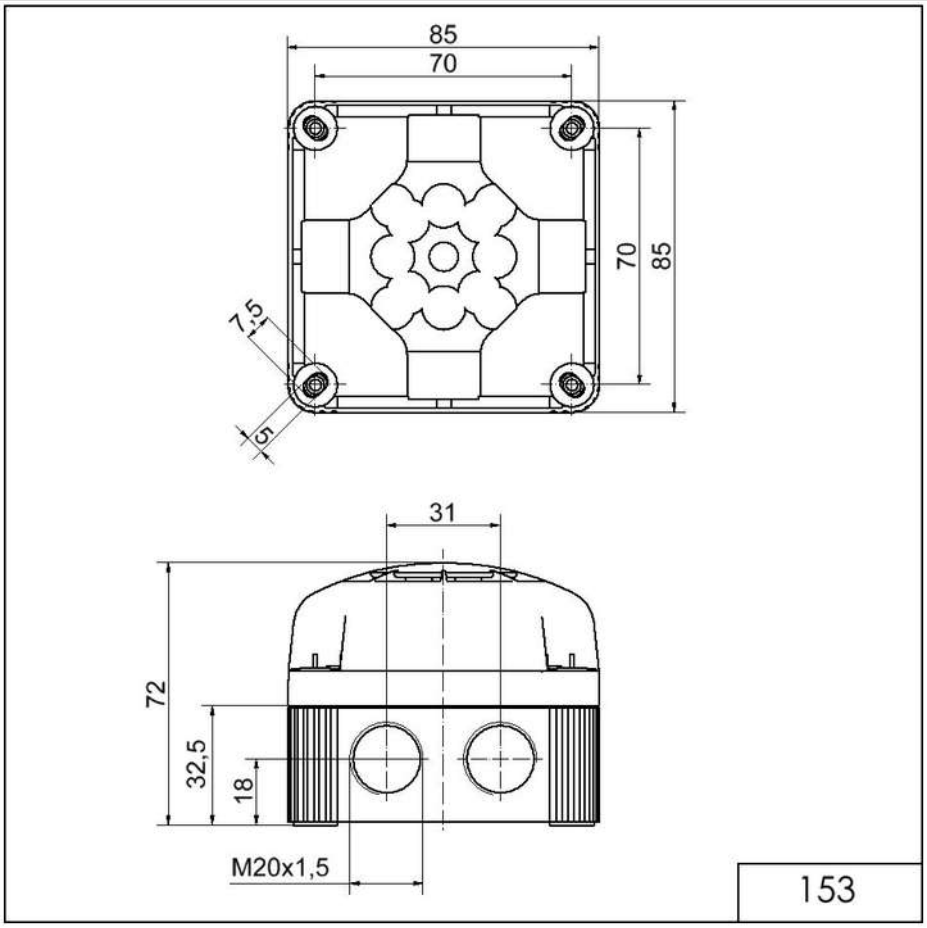


! For additional installation and mounting information, refer to the appropriate user guide at www.werma.com. This printed copy is for information only and is subject to alteration.