E23009

Montagehalterung für Radar-Sensoren

MOUNTING SET RxD ANGLE ADJ

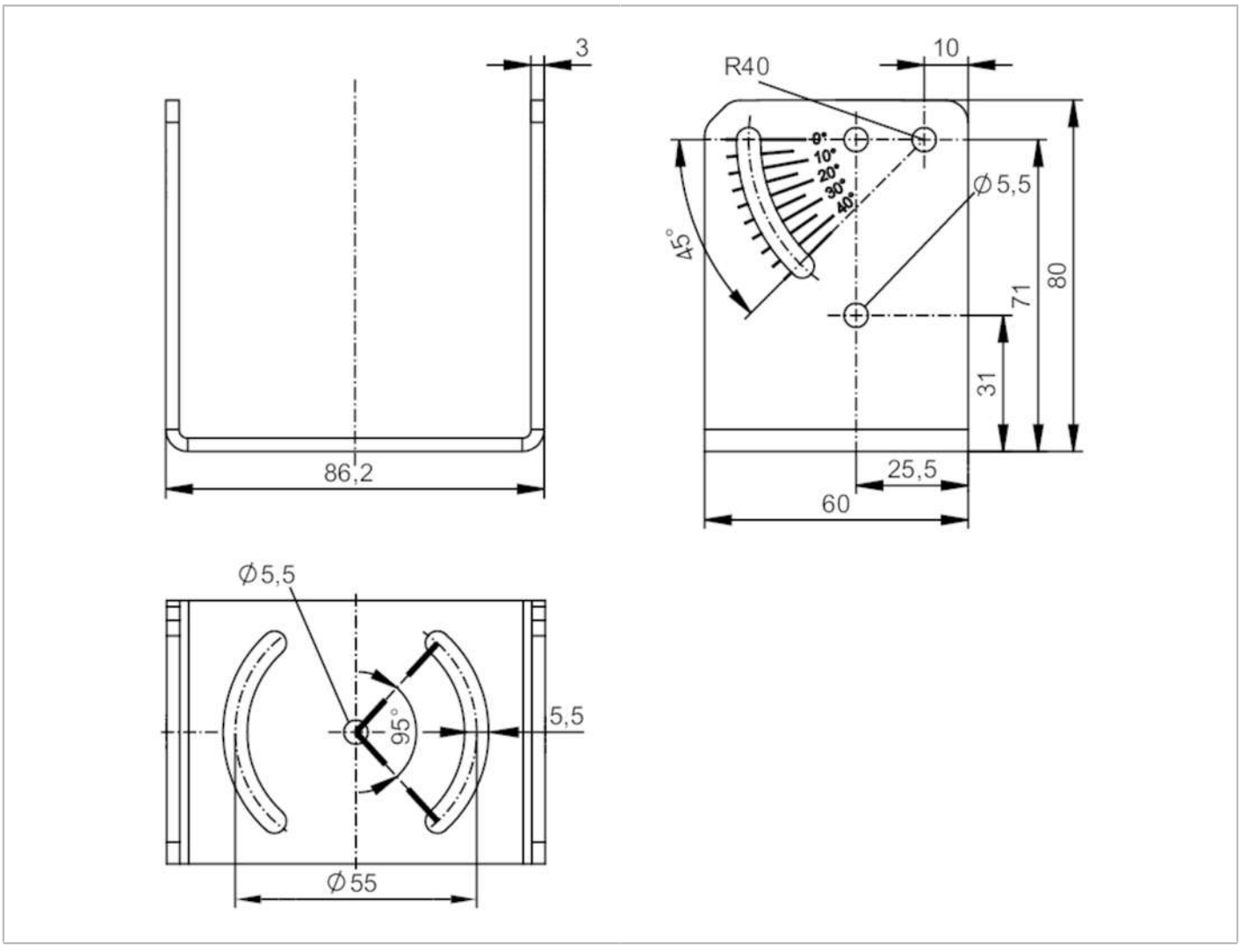

Application		
Design		U-förmige Halterung mit Einstellmöglichkeit bis 45°
Mechanical data		
Weight	[g]	362.35
Type of mounting		screw mounting onto common aluminium profiles and machine panels
Materials		fixture: stainless steel (1.4571/316Ti)
Accessories		
Items supplied		cylinder screws: 2 x M5 x 95, ISO 4762
		hexagon nuts: 2
		washers: 2
Remarks		
Pack quantity		1 pcs.