Block assembly kit, Series AS2/AS3-MBR-...-W07

2024-08-13

R412010121

Series AS2

Qn = 14500 l/min



Technical data

Industry	Industrial
Port	G 1/8
Min. ambient temperature	-10 °C
Max. ambient temperature	50 °C
Housing material	Polyamide
Seal material	Acrylonitrile butadiene rubber
	R412010121

Block assembly kit, Series AS2/AS3-MBR-...-W07

2024-08-13

R412010121

Dimensions in mm

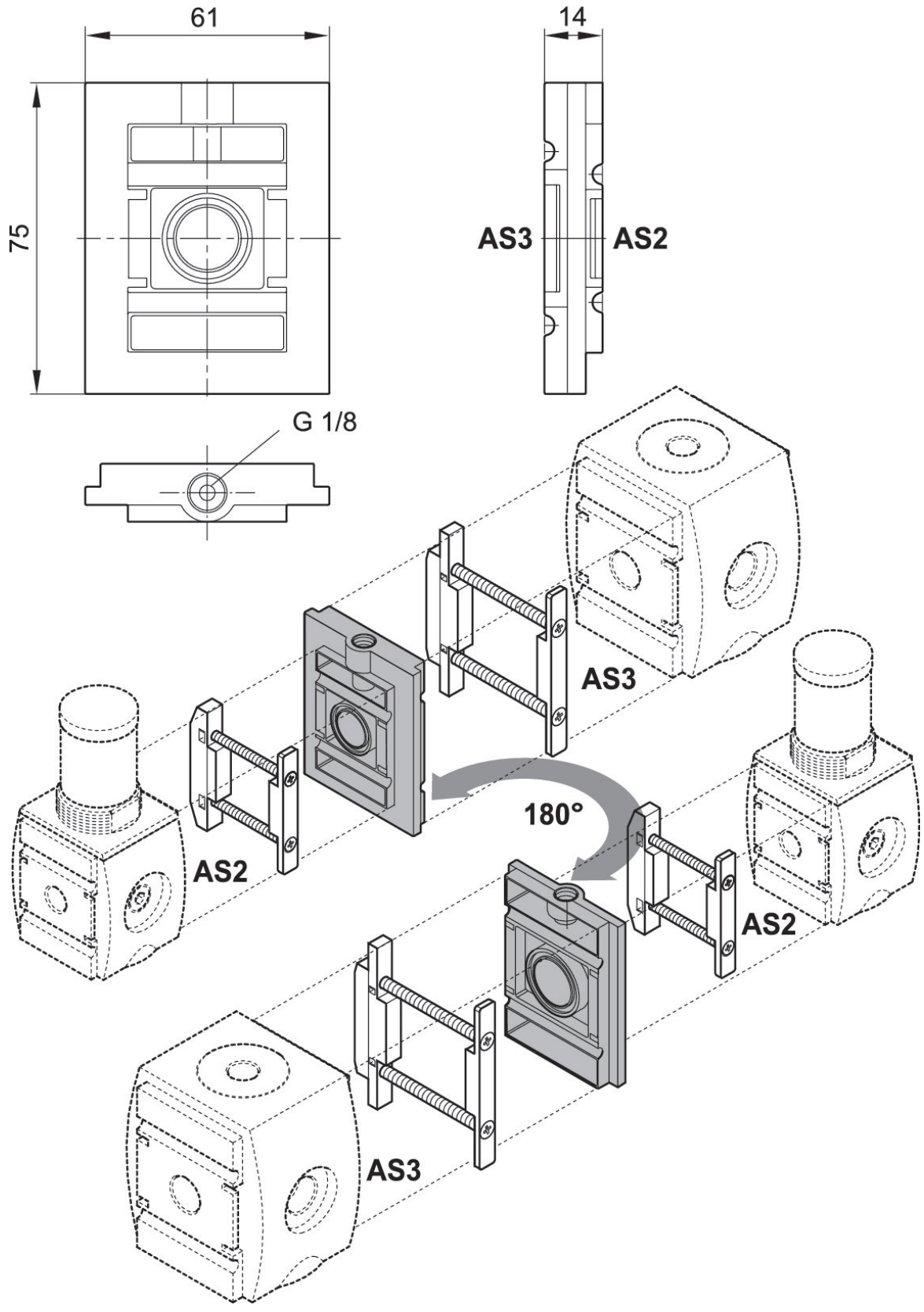

scope of delivery incl. seal