PA9024

Pressure transmitter with ceramic measuring cell

PA-010-RBR14-B-DVG/US/V

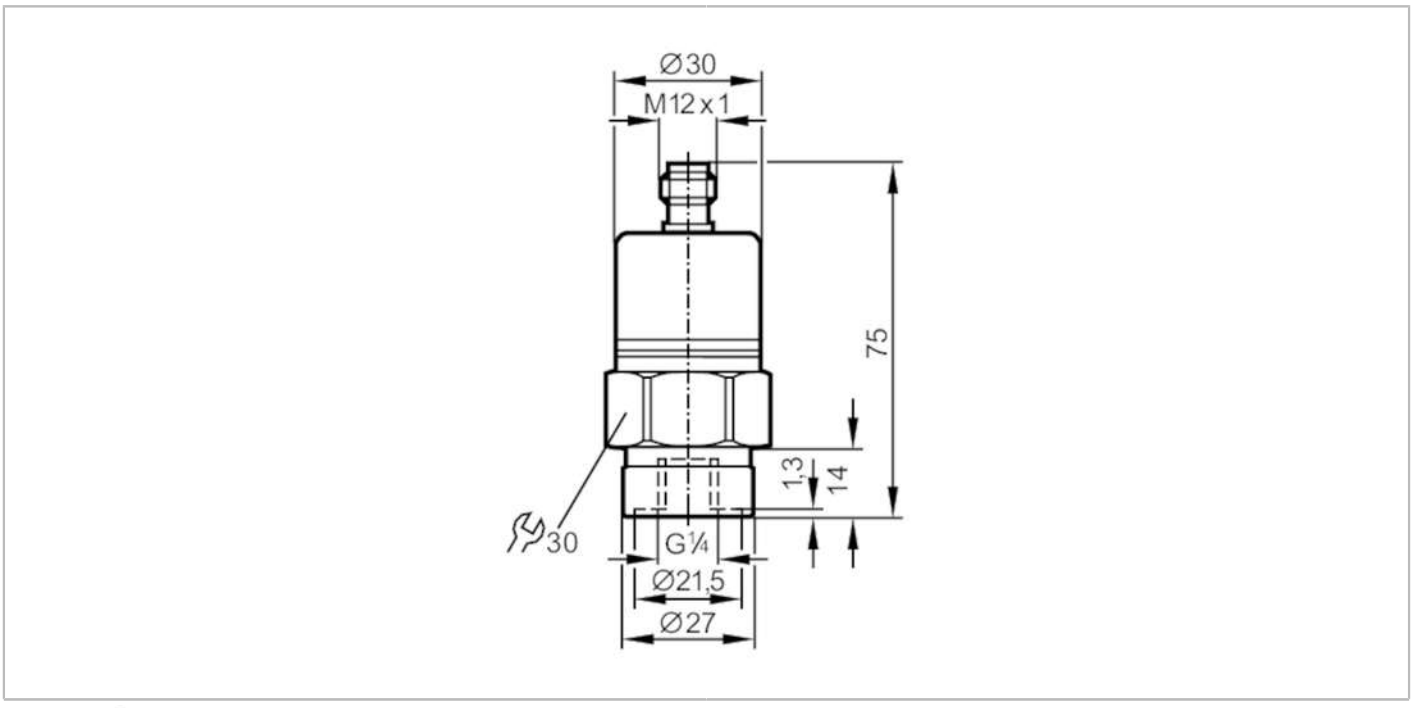

Product characteristics				
Number of inputs and outputs	Number of analogue outputs: 1			
Measuring range	0...10 bar	0...145 psi	0...1000 kPa	0...1 MPa
Process connection	threaded connection G 1/4 internal thread			
Application				
Special feature	Gold-plated contacts			
Application	for industrial applications			
Media	liquids and gases			
Medium temperature [°C]	-25...90; (on request: -40...90 °C)			
Min. bursting pressure	150 bar	2175 psi	15 MPa	
Pressure rating	75 bar	1088 psi	7.5 MPa	
Type of pressure	relative pressure			
Electrical data				
Operating voltage [V]	16...32 DC			
Current consumption [mA]	< 18			
Min. insulation resistance [MΩ]	100; (500 V DC)			
Protection class	III			
Reverse polarity protection	yes			
Inputs / outputs				
Number of inputs and outputs	Number of analogue outputs: 1			
Outputs				
Total number of outputs	1			
Output signal	analogue signal			
Number of analogue outputs	1			

PA9024

Pressure transmitter with ceramic measuring cell

PA-010-RBR14-B-DVG/US/V

Analogue voltage output	[V]	0...10			
Min. load resistance	[Ω]	2000			
Overload protection		yes			
Measuring/setting range					
Measuring range		0...10 bar	0...145 psi	0...1000 kPa	0...1 MPa
Accuracy / deviations					
Repeatability	[% of the span]	< 0,1; (with temperature fluctuations < 10 K)			
Characteristics deviation	[% of the span]	< ± 0,25 (BFSL) / < ± 0,5 (LS); (BFSL = Best Fit Straight Line; LS = limit value setting)			
Long-term stability	[% of the span]	< ± 0,05; (per 6 months)			
Temperature coefficient zero point	[% of the span / 10 K]	0,1; (0...80 °C)			
Temperature coefficient span	[% of the span / 10 K]	0,2; (0...80 °C)			
Response times					
Step response time analogue output	[ms]	3			
Operating conditions					
Ambient temperature	[°C]	-25...80			
Storage temperature	[°C]	-40...100			
Protection		IP 65			
Tests / approvals					
EMC		EN 61000-4-2 ESD	4 kV CD / 8 kV AD		
		EN 61000-4-3 HF radiated	30 V/m		
		EN 61000-4-4 Burst	2 kV		
		EN 61000-4-6 HF conducted	10 V		
		radiation of interference	according to the automotive directive 2004/104/EC		
		CISPR 25			
		immunity	according to the automotive directive 2004/104/EC		
		ISO 11452-2 HF radiated	100 V/m		
		ISO 7637-2 pulse	severity level 4		
Shock resistance		DIN EN 60068-2-27	50 g (11 ms)		
		DIN EN 61373	category 3		
Vibration resistance		DIN EN 60068-2-6	20 g (10...2000 Hz)		
		DIN EN 61373	category 2		
MTTF	[years]	478			
Pressure Equipment Directive		Sound engineering practice; can be used for group 2 fluids; group 1 fluids on request			
Railway applications		DIN EN 50155 / IEC 60571	Klasse T3, C1, S1		
Mechanical data					
Weight	[g]	222			
Housing		cylindrical			
Dimensions	[mm]	Ø 30 / L = 75			
Materials		stainless steel (316L/1.4404); FKM; PA; EPDM/X			

PA9024

Pressure transmitter with ceramic measuring cell

PA-010-RBR14-B-DVG/US/V

Materials (wetted parts)	stainless steel (303/1.4305); ceramics; FKM
Min. pressure cycles	100 million
Process connection	threaded connection G 1/4 internal thread
Restrictor element integrated	no (can be retrofitted)

Remarks

Pack quantity	1 pcs.

Electrical connection

Connector: 1 x M12; coding: A; Contacts: gold-plated



Connection

