Parker Hannifin Corporation
Low Pressure Connectors Europe Division
Parc Alcyone - Bat. D
1 rue André et Yvonne Meynier
CS 46911, 35069 Rennes Cedex, France
Email: webcontact@parker.com

ENGINEERING YOUR SUCCESS.

PARKER Low Pressure Connectors Europe Division
LF 3800/ LF 3900 - 303/316L Stainless Steel Push-In Fittings for Aggressive Environments

PART Number: 3879 06 10

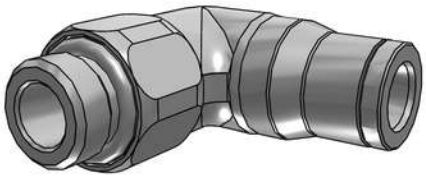

Interactive 3D graphic, click to activate and rotate
(3D capable PDF viewer required)

Technical Data	
Part Number	3879 06 10
Series Name	LF 3800/ LF 3900 - 303/316L Stainless Steel Push-In Fittings for Aggressive Environments
Series Code	LF3800/LF3900_316L-stainless-steel-pushin-fittings
Division ID	A43098
Division Name	Low Pressure Connectors Europe Division
Company	Parker Hannifin

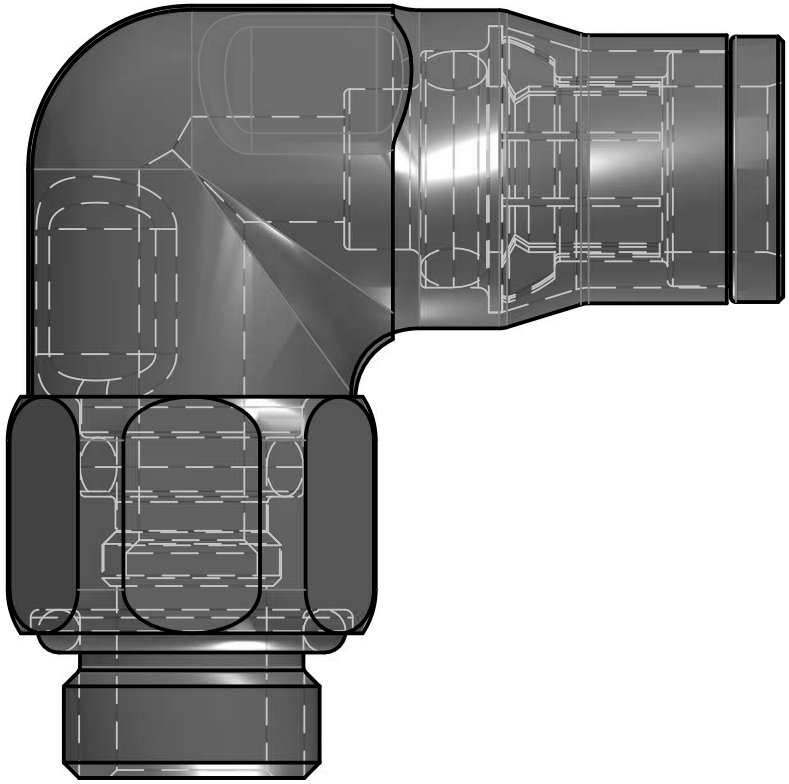

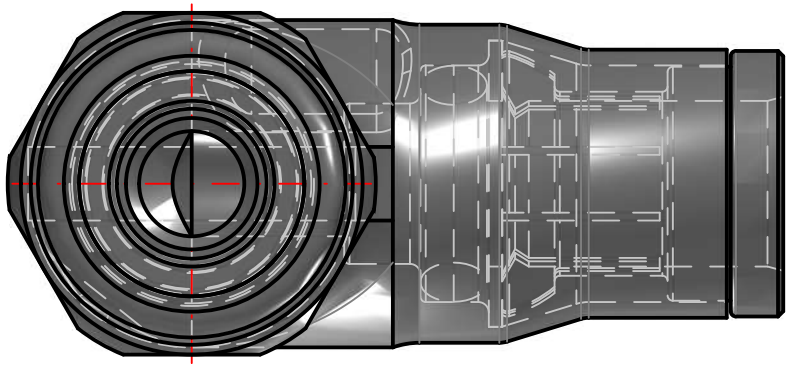

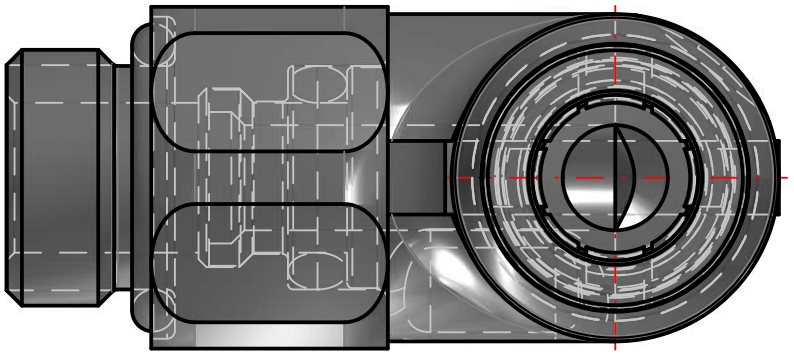

Disclaimer:
Parker Low Pressure Connectors has a continuous policy of product development and although the Company reserves the right to change specifications, it attempts to keep customers informed of any alterations. This publication is for general information only and customers are requested to contact our Sales Department for detailed information and advice on a products suitability for specific applications. All products are sold subject to the company's Standard conditions of sale.

3879 06 10

Price: contact Parker

PDF Datasheet Powered by CADENAS PARTsolutions