YEL 209-2F

Popular item

Dimensions

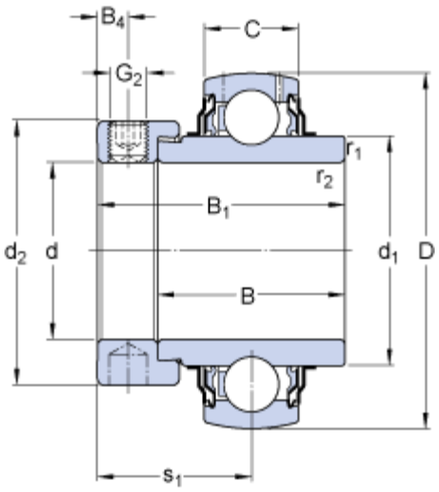

d		45	mm
D		85	mm
B_1		56.3	mm
B		42.8	mm
C		22	mm
d_1	≈	56.8	mm
d_2		62	mm
B_4		6.75	mm
$r_{1,2}$	min.	1	mm
s_1		34.9	mm

Calculation data

Basic dynamic load rating	C	33.2	kN
Basic static load rating	C_0	21.6	kN
Fatigue load limit	P_u	0.915	kN
Limiting speed [1)]		4300	r/min
Calculation factor	f_0	14	

Mass

Mass complete bearing		0.79	kg

Mounting information

Thread grub screw	G_2	M10x1	
Hexagonal key size for grub screw	N	5	mm
Recommended tightening torque for grub screw		16.5	N·m