mec
switches

switches



Switch Engineering Catalogue No. 6

mec Competences

Since its foundation in 1938, mec has been making state-of-the-art electromechanical components.

Today we are focusing on continuous innovation to maintain our position as leader in the segment of high end PCB mount push button switches. By always choosing the best possible solution, whether it is a design principle, a material or a manufacturing process we maintain and improve our sustainable high quality level. With this approach a wealth of know-how has been built up over the years for the benefit of new product development and custom solutions.

Despite the trend of outsourcing it has been the policy of mec to maintain a high degree of vertical integration that enables us to react promptly on specific customer requests. Only processes that are not considered core competences have been outsourced.

Research and Development

Equipped with the latest CAD solutions with 3D facilities and optical simulation software our experienced R&D engineers are designing, simulating and evaluating new products and machinery continuously.
The combination of a strong R&D facility and the vertical integration enables us to provide custom designs from conception to completion.

Automation - Tooling - Moulding - Stamping - Graphics Marking - Custom Assembly

All switch modules are manufactured on fully automated production lines with complete in-line component tests. All production statistics are analysed and stored in computers. 98% of all parts used in the mec switches are produced in-house.

Ongoing investments ensure that latest technology is available for the tooling department. However, at mec we believe that the most important factors for maintaining a high tool standard are the outstanding skills and experience of our toolmakers.





Prompt reaction to customer requests has always been important to mec.

The plastic moulding department consists of numerous moulding machines. Rigorous process control ensures the highest possible precision and reproduceable quality that is essential for making precision components.

All metal parts are manufactured in our metal stamping department. When making contact elements, a computer controlled test station provides a high level of repeatability and secures that any required corrections can be made instantly.
Graphics marking is also made in-house to secure constant quality and durability of both standard and customized graphics for the many keycaps and bezels available.
The assembly department offers all kinds of value-added services such as customized final assembly made by experienced and quality conscious personnel.

Logistics and Production Planning

The production planning software is today fully integrated into the financial and administrative system.
The system provides the backbone that allows us to maintain precise deliveries and to offer excellent customer service.

Quality – Environment - RoHS

We strive to maintain the highest possible quality standard through our QA system. With 100% in-line inspection, tight tolerance on all parts and use of only quality material we position ourselves to reach the highest achievable.
To be a part of a sustainable industrialized world environmental consciousness is crucial. At mec we have been substituting materials to more environmental friendly alternatives and are recycling as much as possible. Legal authorities are auditing our environmental management system regularly and confirming that our goal is being reached.

RoHS conversion has been completed for all switches. To manage the inventory in the complete supply chain a separate part number system has been established. All parts manufactured today are RoHS compatible.

Sales - Customer Service - Distribution

mec have a well established global distribution network that provides a presence in all parts of the world where electronic manufacturing takes place. Through close contact and continuous product training offered to our distributors we maintain a highly qualified and responsive global distribution network
Please contact mec or one of our distributors if you require assistance or samples to complete your new design with mec switches. We welcome inquiries also for custom solutions.

For updates of products and/or changes of specifications please see **www.mec.dk**

mec Switches

Colourful and reliable to complete your next design successfully



Contents

Selection Guide

multimec® Pushbutton switches 04
multimec® Pushbuttons continued 05
unimec™ Pushbutton switches 06
multimec® Switches under foil 07
multimec® Switches - Variable heights 08
multimec® Solid colour codes 37

multimec® pushbutton switches

illumec™ 4A 09
3A + 1B/1C+2A/2B 10
3A + 1A/1H/1M/1ZA 11
Navimec™ 12
illumec™ 4F 13
3F + 1N 14
3F + 1D/1E/1F 15
3F + 1K/1KB/1KC 16
3F + 1WA/1WD/1WP 17
3F + 1P/1Q/1R 18
3F + 1T/1U/1V 19
3F + 1X 20
3F + 1S+2S 21
Aquamec™ 22
3F + 1GA/1GC 26
3C/3E switches 27
Varimec™ - Double variability - round 28
Varimec™ - Double variability- square 29
Right angle switches 3C/3E/3F 30
3F Right angle switches with keycaps 31
Legends 23

Technical information multimec®

Basic switch modules 32
Basic switches continued and tape & reel 33
Spacing 34
Technical specifications 35
LEDs 36

unimec™ pushbutton switches

16.324-16.326 38
16.310-16.315 39
16.300/16.700/16.800 40
Vario Support 41
Legends 42
unimec™ with multimec® keycaps 43

Technical information unimec™

Basic switch modules 44
Technical specifications + LEDs 45

Applications

Applications for inspiration 24
Applications for inspiration 25

General information

Competences 02
Usage guidelines 46
Custom products 47

For updates of products and/or changes of specifications please see **www.mec.dk**

multimec® PCB Mount Pushbutton Switches

mec specializes in the production of PCB mounted pushbutton switches. Our products are designed to be used in a wide variety of applications. Through the use of a modular approach to switch assembly the user is provided with a unique flexibility in his choice of options. multimec® switches are known for their crisp audible tactile feel although a “quiet” model is available for sensitive applications such as audio and conference equipment.
The multi-coloured keycaps, bezels and LEDs snap together to produce almost unlimited switch configurations. Customized keycaps and bezels can be manufactured for special applications.



3A/4A Switches					Caps and Bezels	Page
Pushbutton		Illuminated				
TH	SMD	TH		SMD		
 3AT	 3AS	 3AT	 4AT	 4AS		
X	X				 1M  1ZA	11
		X	X	X	 1H	11/09
					 1C +  2A/2C	10/09
X	X	X	X	X	 1A	11/09
					 1B +  2A/2C	10/09
					 1B +  2B/2D + 2B LED	10/09

3C/3E Switches				Caps and Actuators	Page
Pushbutton					
TH		SMD			
 3CT	 3ET	 3CS	 3ES		
X		X			27
	X		X	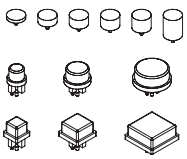	27 28 29

Navimec™ Switches					Caps	Page
Pushbutton			Illuminated			
TH		SMD	TH	SMD		
 3AT	 3FT	 3AS	 4FT	 4FS		
X		X			 1ZB 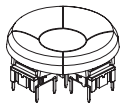	12/13
	X		X	X	 1ZC	

The size of the switches, caps, actuators and bezels listed may not correspond to the actual size.

For updates of products and/or changes of specifications please see **www.mec.dk**

multimec® PCB Mount Pushbutton Switches



3F/4F Switches					Caps and Bezels	Page
Pushbutton		Illuminated				
TH	SMD	TH		SMD		
 3FT	 3FS	 3FT	 4FT	 4FS		
X	X				1GA 1GC	26
					1P	18
					1ZC	12
					1K + 2K	16
		X	X	X	1K 1KB 1KC + 2K	16/13
					1Q 1R	18/13
X	X	X	X	X	1D 1E 1F	15/13
					1N	14/13
					1S	21/13
					1T 1U 1V	19/13
					1X	20/13
					AQN AQC AQB01	22/13
					1WA 1WD 1WP	17/13

Right Angle Switches				Caps and Actuators	Page
Pushbutton			Illuminated		
Through-hole					
 3CTRAS	 3ETRAS	 3FRAS	 3FRAS w/LED		
X					30
	X				30/27
	X			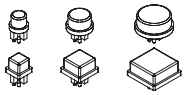	30/28 30/29
		X		1GA 1GC	31/26
				1P	31/18
				1ZC	31/12
				1K + 2K	31/16
				1T 1U 1V	31/19
				1S	31/21
			X	1D 1E 1F	30/31/15
				1Q 1R	30/31/18
				1S	30/31/21
				1N	30/31/14
				1X	30/31/20

The size of the switches, caps, actuators and bezels listed may not correspond to the actual size.

For updates of products and/or changes of specifications please see **www.mec.dk**

unimec™ PCB Mount Pushbutton Switches

This switch range is one of the smallest two pole switches available today. The contacts are capable of producing eight functions depending on the PCB layout. The unimec™ switch is available in momentary and alternate action models with standard silver contacts or optional gold contacts for low level switching. All unimec™ switches are available in low or high temperature models.

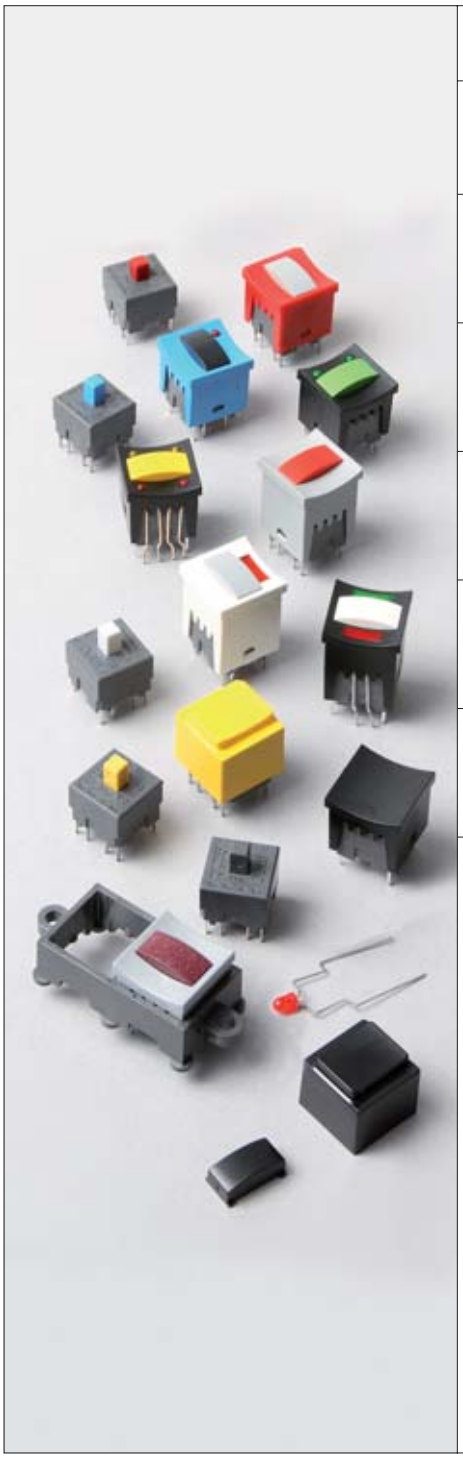

Switches Low. Temp.	Switches High Temp.		Caps and Bezels	Page
15.500		Silent silver	16.300 + 16.310	39
	15.420	Silent gold	16.300 + 16.311 + 16.920	39
15.501	15.401	Momentary silver	16.300 + 16.312 + 16.921	39
15.502	15.402	Momentary gold	16.300 + 16.314 + 16.920 + 16.921	39
15.551	15.451	Alternate silver	16.300 + 16.315 + 2x16.920/16.921	39
15.552	15.452	Alternate gold	16.270 + 16.300 + 16.324	38
			16.270 + 16.300 + 16.325 + 16.327 + 16.922	38
			16.270 + 16.300 + 16.326 + 2x16.327/16.922	38
			16.700	40
			16.800	40
			16.300	40
			Vario Support 1x1 to 10x10	41
			Legends for 16.300 + 16.700	42

The size of the switches, caps, actuators and bezels listed may not correspond to the actual size.

For updates of products and/or changes of specifications please see **www.mec.dk**

multimec® Switches Under Foil

The use of multimec® under a foil overlay offers an attractive alternative to the traditional membrane switch. With a mechanical life of 10 million cycles, multimec® will outperform membrane switches under the most extreme conditions. multimec® switches can be specified with LED illumination to provide back lighting of the overlay for front panel applications. While mec does not manufacture foil overlays, our local distributors can help you locate sources of supply.





Switches	Caps and Actuators	Overall Height (mm)	Diameter (mm)	Page
3CTL6 3CTH9		6.4	6.5	27
3CSH9				
3ETL9 3ETH9		08.0-15.0	6.5	27
3ESH9				
3FTL6 3FTH9	1GA	12.5	11.0	26
	1GC		15.0	
3FSH9	+ 2S (optional)	17.5-22.5		
3ETL 3ETH		10.4-22.5	5.2 7.8 11.6	28
3ESH			Square 5.2 x 5.2 7.8 x 7.8 11.6 x 11.6	29
3FTL6 3FTH9	1D	14.9	9.6	15/13
3FSH9	1K	19.1	14.3x14.3	26/13
3FTL6 w/LED	1S	16-22.5	6.5	21/13
4FTH9 w/LEDs	1T	14.9	10.6x10.6	19/13
4FSH9 w/LEDs	1U	14.9	10.6	19/13

The size of the switches, caps, actuators and bezels listed may not correspond to the actual size.

For updates of products and/or changes of specifications please see **www.mec.dk**

multimec® Variable height switches

mec is probably the most flexible switch manufacturer worldwide when it comes to fulfilling customers' specific height requirements. This selection guide on variable height switches is giving a simple overview of the many height options the multimec® switch line can offer and how to overcome the problems with adapting building heights.



Switches	Caps and Actuators	Overall Height (mm)	Diameter (mm)	Page
3CTL6 3CTH9 3CSH9	White – Black	6.4	6.5	27
3ETL9 3ETH9 3FSH9	Blue – Grey – Yellow – Red – Black	08.0 09.5 10.4 11.0 12.0 15.0	6.5	27
3FTL6 3FTH9 3FSH9	1GA09 Black 1GC09 Black + 2S (optional)	12.5 17.5-22.5 in steps of 1 mm	11.0 15.0	26
3ETL 3ETH 3ESH	Blue – Grey – Yellow – Red – Black	10.4-22.5 Double Variability Above recess: 2.4-6.4 Below recess: 0-8.1	5.2 7.8 11.6 Square 5.2x5.2 7.8x7.8 11.6x11.6	28 29
3FTL6 3FTH9 3FSH9	1S09 Black + 2S (optional)	16.0 19.0 22.5 21.0-32.5 in steps of 1 mm	6.5	21
3FTL6 w/LED 4FTH9 w/LEDs 4FSH9 w/LEDs	1S11 Transparent + 2S (optional)	16.0 19.0 22.5 21.0-32.5 in steps of 1 mm	6.5	21/13

The size of the switches, caps, actuators and bezels listed may not correspond to the actual size.

For updates of products and/or changes of specifications please see **www.mec.dk**

multimec® illumec™ 4A

Technical Data

- through-hole or SMD
- 50mA/24VDC
- single pole/momentary
- 10.000.000 operations life time
- IP67 sealing
- temperature range:
  high temp. switch: -40/+160°C
  LED: -30/+85°C

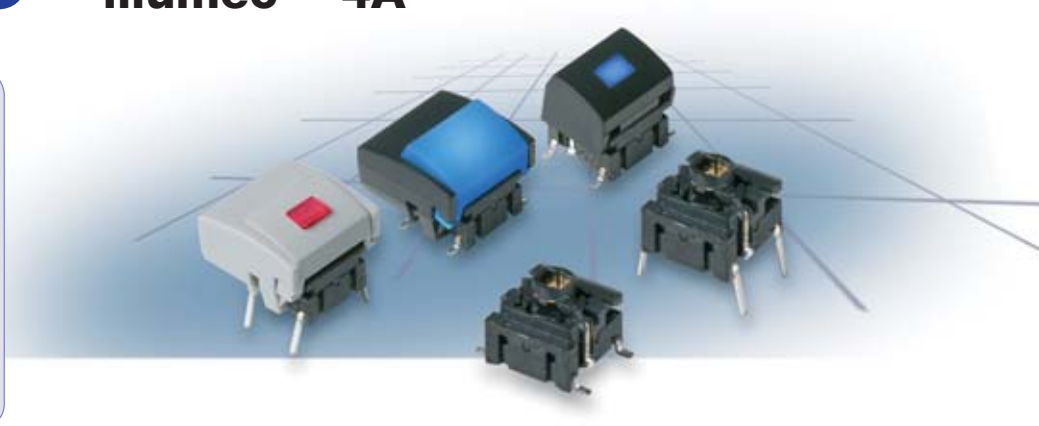

Dimensions (through-hole)

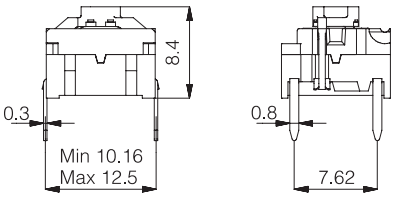

Top View

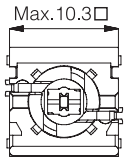

PCB layout and Circuit Diagram

1 LED

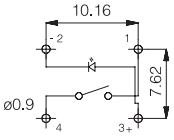

2 LEDS

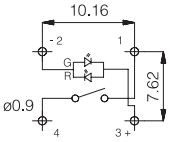

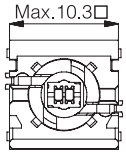

Dimensions (SMD)

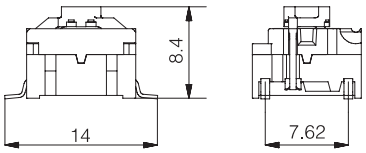

Top View

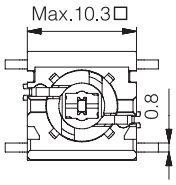

PCB layout and Circuit Diagram

1 LED

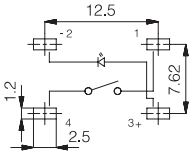

2 LEDS

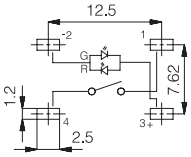

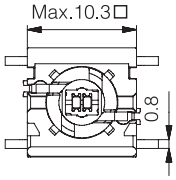

Technical specifications for 4A switch and LEDs see pages 35 and 36

How to order

4 A ☐☐☐ + ☐☐☐☐ ☐☐ ☐☐

Switch 4A

Mounting
- **SH9** surface mount
- **TH9** through-hole

LED
- **01**
- **22**
- **42**
- **61**
- **82**
- **2242**
- **8222**
- **8242**

Illuminated Cap

- **1A** 10,12,14,16,18
- **1B** 10,12,14,16,18 + 2C Bezel ☐☐ Solid Colour or 2D Bezel ☐☐ Solid Colour ☐ Illuminated Lens

Cap ☐☐ **Solid Colour** ☐☐ **Illuminated Lens** ☐

- **1H** Solid Colour + lens 1,2,4,6,8
- **1C** Solid Colour + lens 1,2,4,6,8 + 2C Bezel ☐☐ Solid Colour or 2D Bezel ☐☐ Solid Colour ☐ Illuminated Lens

Colour codes

LEDs		Illuminated Caps		Lenses	
01	blue	**10**	frosted blue	**1**	transparent
22	green	**11**	transparent	**2**	green
42	yellow	**12**	frosted green	**4**	yellow
61	white	**14**	frosted yellow	**6**	frosted white
82	red	**16**	frosted white	**8**	red
2242	green/yellow	**18**	frosted red		
8222	red/green				
8242	red/yellow				

Solid Colours Caps and Bezels

		For 1A, 1B and 2C only:			
00	blue	**30**	ultra blue	**50**	metal dark blue
02	green	**40**	dusty blue	**53**	metal light grey
03	grey	**42**	aqua blue	**57**	metal dark grey
04	yellow	**32**	mint green	**58**	metal bordeaux
06	white	**33**	tele grey		
08	red	**34**	melon		
09	black	**38**	noble red		

Dimensions

Caps	See Page
1A - 1H	11
1B - 1C	10
2C - 2D	
Same as for 2A/B	10

Ordering example: 4ASH982 + 1A18 or 4ATH901 + 1B10 + 2C09

For updates of products and/or changes of specifications please see **www.mec.dk**

multimec® 3A + 1B/1C + 2A/2B

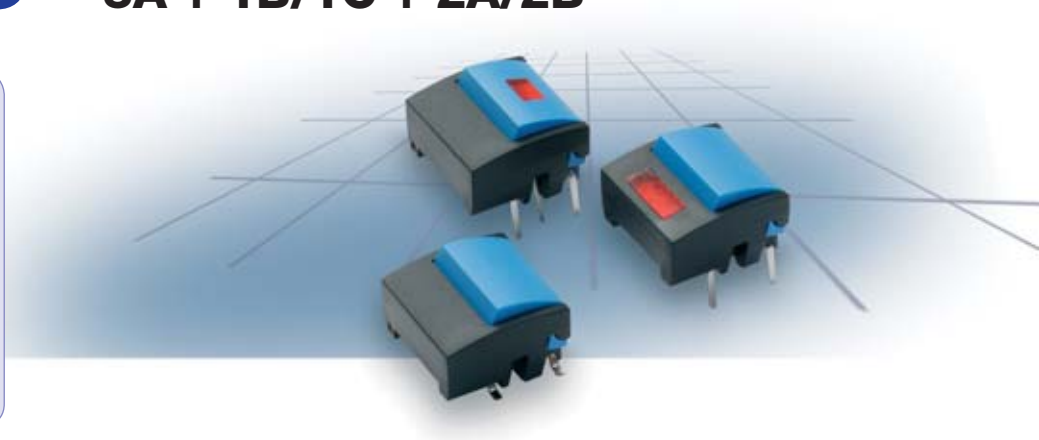

Technical Data

- through-hole or SMD
- 50mA/24VDC
- single pole/momentary
- 10.000.000 operations life time
- IP67 sealing
- temperature range:
  low temp: -40/+115°C
  high temp: -40/+160°C

Dimensions (through-hole)

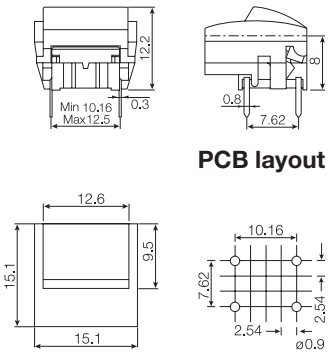

Dimensions w/LED in switch (1C/1H)

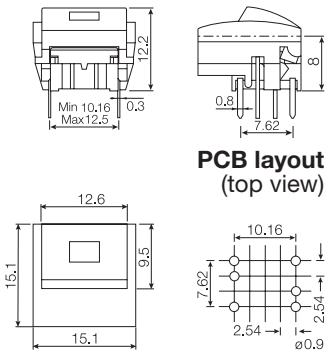

Dimensions w/LED PCB mounted (2B)

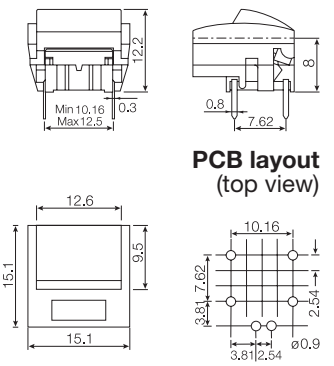

Dimensions (SMD)

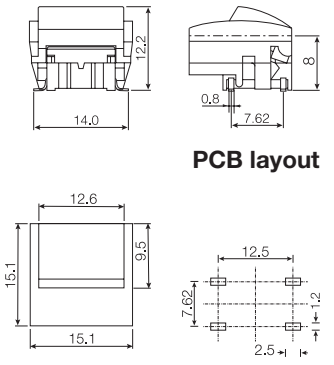

How to order

3 A Switch

Mounting
T through-hole
S surface mount

L 6 low temp.
H 9 high temp.

+

1 B Cap

00 blue
02 green
03 grey
04 yellow
06 white
08 red
09 black

+

2 A Bezel

00 blue
02 green
03 grey
04 yellow
06 white
08 red
09 black

For 1B and 2A only:

30 ultra blue
40 dusty blue
42 aqua blue
32 mint green
33 tele grey
34 melon
38 noble red
50 metal dark blue
53 metal light grey
57 metal dark grey
58 metal bordeaux

---

3 A Switch

T Mounting
T through-hole

L 6 low temp.
H 9 high temp.

LED
00 blue
20 green
40 yellow
80 red

+

1 C Cap

00 blue
02 green
03 grey
04 yellow
06 white
08 red
09 black

Lens
1 transparent
2 green
4 yellow
8 red

+

2 A Bezel

00 blue
02 green
03 grey
04 yellow
06 white
08 red
09 black

---

3 A Switch

Mounting
T through-hole
S surface mount

L 6 low temp.
H 9 high temp.

+

1 B Cap

00 blue
02 green
03 grey
04 yellow
06 white
08 red
09 black

+

2 B Bezel

00 blue
02 green
03 grey
04 yellow
06 white
08 red
09 black

Lens
1 transparent
2 green
4 yellow
6 frosted white
8 red

+

2 B X X X

LED for 2B bezel

20 green
40 yellow
80 red

Keycaps and bezels shown on this page can also be used on
illumec™ switch 4A - see page 9. Part nos. for bezels for 4A are 2C and 2D.

Ordering example: 3ATL640 + 1C094 + 2A04

For updates of products and/or changes of specifications please see **www.mec.dk**

multimec® 3A + 1A/1H/1M/1ZA

Technical Data

- through-hole or SMD
- 50mA/24VDC
- single pole/momentary
- 10.000.000 operations life time
- IP67 sealing
- temperature range:
  low temp: -40/+115°C
  high temp: -40/+160°C



Dimensions (through-hole) 1A

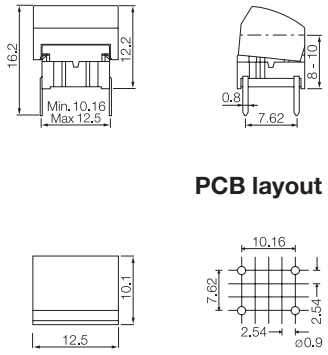

Dimensions (w/LED) 1H

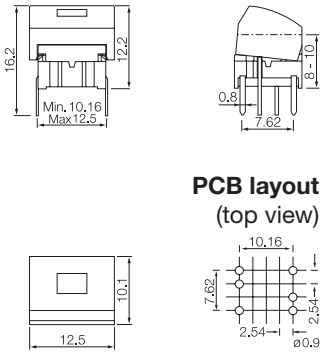

Dimensions (SMD) 1ZA

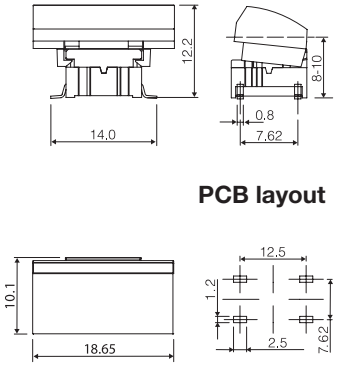

Dimensions (SMD) 1M

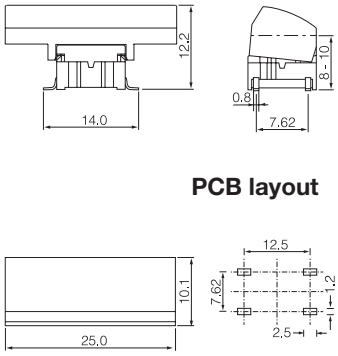

How to order

3 A **Switch**

Mounting
T through-hole
S surface mount

L 6 low temp.
H 9 high temp.

\+

1 A **Cap**



1 Z A **Cap**

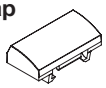

00 blue
02 green
03* grey
04 yellow
06* white
08 red
09* black

30* ultra blue
40* dusty blue
42* aqua blue
32 mint green
33 tele grey
34 melon
38 noble red

50* metal dark blue
53* metal light grey
57* metal dark grey
58* metal bordeaux

***) Colours for 1ZA**

---

3 A **Switch**

Mounting
T through-hole
S surface mount

L 6 low temp.
H 9 high temp.

\+

1 M **Cap**



00 blue
02 green
03 grey
04 yellow
06 white
08 red
09 black

---

3 A **Switch**

T **Mounting**
T through-hole

L 6 low temp.
H 9 high temp.

LED
00 blue
20 green
40 yellow
80 red

\+

1 H **Cap**

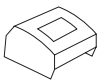

00 blue
02 green
03 grey
04 yellow
06 white
08 red
09 black

Lens
1 transparent
2 green
4 yellow
6 frosted white
8 red

Keycaps shown on this page can also be used on
illumec™ switch 4A - see page 9

Ordering example: 3ATL680 + 1H098

For updates of products and/or changes of specifications please see **www.mec.dk**

multimec® Navimec™

Technical Data

- through-hole or SMD
- 50mA/24VDC
- single pole/momentary
- 10.000.000 operations life time
- IP67 sealing
- temperature range:
  low temp: -40/+115°C
  high temp: -40/+160°C



Dimensions 1ZB (through-hole)

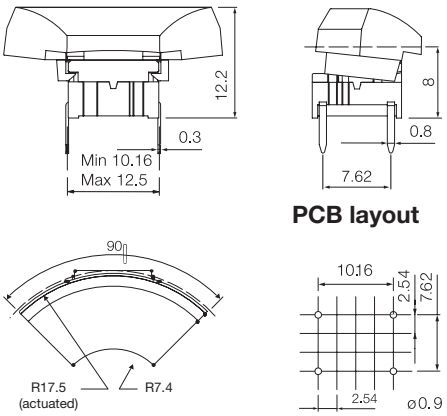

PCB layout

Dimensions 1ZC (SMD)

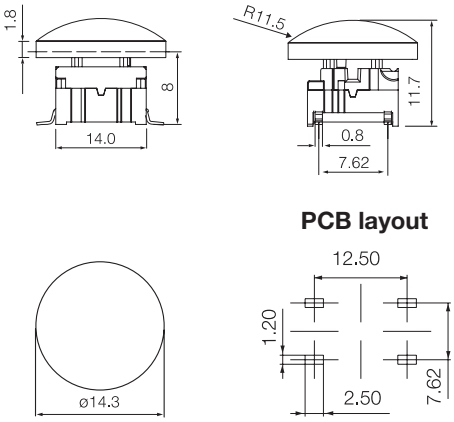

PCB layout

Recommended panel cut-out:

ø35.0-35.5 Depending on application

PCB layout TH

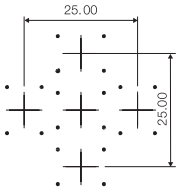

PCB layout SMD

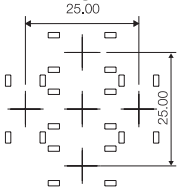

Dimensions Navimec™ Module

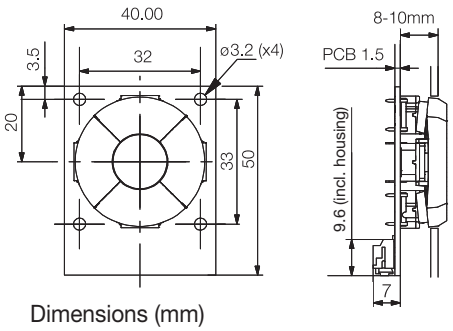

Dimensions (mm)

Circuit Diagram Navimec™ Module

(Front side View)

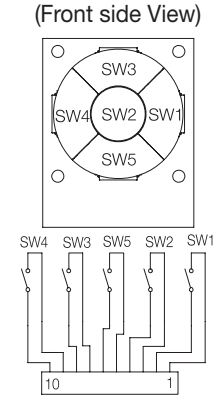



The plug on the Navimec™ module is JST SMT S10B-PH-SM3-TB or similar.
We recommend using
Cable socket: JST PHR-10 or similar
Contact: JST SPH-002T-PO.5S or similar.

How to order

3 A				
Switch	**Mounting**	**L 6** low temp.	**Cap 1ZB**	**03** grey
	T through-hole	**H 9** high temp.	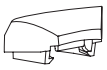	**06** white
	S surface mount			**09** black
				30 ultra blue
				40 dusty blue
3 F				**42** aqua blue
Switch	**Mounting**	**L 6** low temp.	**Cap 1ZC**	**50** metal dark blue
	T through-hole	**H 9** high temp.		**53** metal light grey
	S surface mount			**57** metal dark grey
				58 metal bordeaux

Navimec™ Module

Part No. 9508000	**Navimec™ Module excl. keycaps**
Part No. 950XXYY	**Navimec™ Module incl. keycaps**
Part No. 9509XXXYYY	**Navimec™ Module incl. keycaps with legends**

The module can be delivered with keycaps (4 x 1ZB and 1 x 1ZC) in solid colours or black keycaps with white legends.
For module incl. keycaps in solid colours (950XXYY) please indicate colour code for 1ZBXX and colour code for 1ZCYY.
For module incl. keycaps with legends (9509XXXYYY) please indicate legends for 1ZBXXX and legends for 1ZCYYY. All Caps are black with white legends. Please see legends available on page 23.

Examples: Module with 5 switches (4x3ATL6+1x3FTL6) mounted with 4x1ZB30 ultra blue and 1x1ZC42 aqua blue = 9503042.
Module with 5 switches (4x3ATL6+1x3FTL6) mounted with 4x1ZB09XD136 (legend arrow) and 1x1ZC09118 (legend OK) = 9509136118.

Ordering example: 4x3ATL6+1ZB53 and 1x3FTL6+1ZC58 or Navimec™ Module 9505358

For updates of products and/or changes of specifications please see **www.mec.dk**

multimec® illumec™ 4F

Technical Data

- through-hole or SMD
- 50mA/24VDC
- single pole/momentary
- 10.000.000 operations life time
- IP67 sealing
- temperature range:
  high temp. switch; -40/+160°C
  LED: -30/+85°C



Dimensions (through-hole)

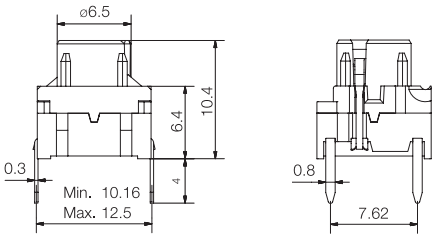

Top View

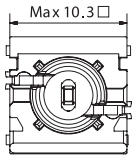

Dimensions (SMD)

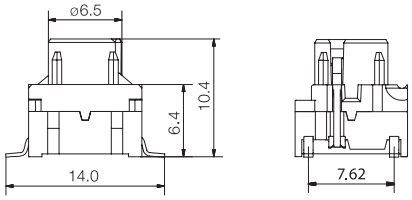

Top View

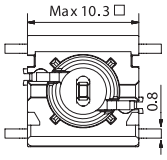

PCB layout and Circuit Diagram

1 LED

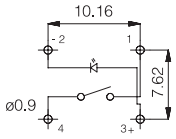

2 LEDS

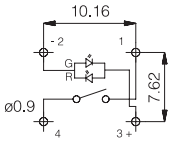

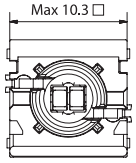

PCB layout and Circuit Diagram

1 LED

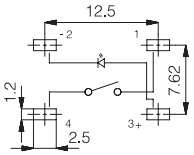

2 LEDS

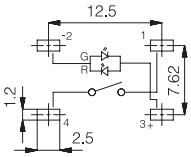

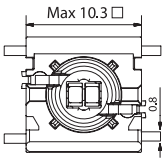

Technical specifications for 4F switch and LEDs see pages 35 and 36

How to order

4 F				+			
Switch	Mounting		LED		Illuminated Cap		
	SH9 surface mount		**01**			**1D**	
	TH9 through-hole		**22**			**1K,1KB,1KC**	
			42			**1N**	
			61			**1S**	
			82			**1T**	
			2242			**1U**	
			8222			**1V**	
			8242			**1WA,1WD,1WP**	
						1X	

Colour code

		Cap	Solid Colour / Illuminated Lens
11,16			
11,16			
10,12,14,16,18			**1E Solid Colour + lens 1,2,4,6,8**
11			**1F Solid Colour + lens 1,2,4,6,8**
16			**1Q Solid Colour + lens 1,6**
16			**1R Solid Colour + lens 1,6**
16			
16			
11			

Colour codes

LEDs	Illuminated Caps	Lenses
01 blue	**10** frosted blue	**1** transparent
22 green	**11** transparent	**2** green
42 yellow	**12** frosted green	**4** yellow
61 white	**14** frosted yellow	**6** frosted white
82 red	**16** frosted white	**8** red
2242 green/yellow	**18** frosted red	
8222 red/green		
8242 red/yellow		

Solid Colours

1E,1F	1Q,1R
00 blue	**00** blue
02 green	**03** grey
03 grey	**08** red
04 yellow	**09** black
06 white	
08 red	
09 black	

Dimensions

Caps	See Page
1D,1E,1F	**15**
1K,1KB,1KC	**16**
1N	**14**
1Q,1R	**18**
1S	**21**
1T,1U,1V	**19**
1WA,1WD,1WP	**17**
1X	**20**

Ordering example: 4FSH98242 + 1D11 or 4FTH922 + 1T16

For updates of products and/or changes of specifications please see **www.mec.dk**

multimec® 3F + 1N

Technical Data

- through-hole or SMD
- 50mA/24VDC
- single pole/momentary
- 10.000.000 operations life time
- IP67 sealing
- temperature range:
  low temp: -40/+115°C
  high temp: -40/+160°C



Dimensions (through-hole)

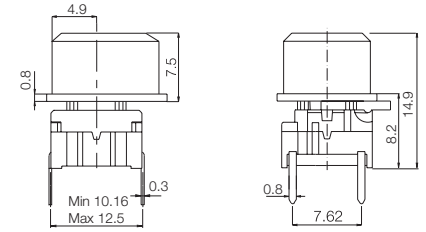

PCB layout

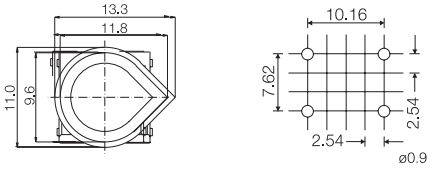

Dimensions (w/LED)

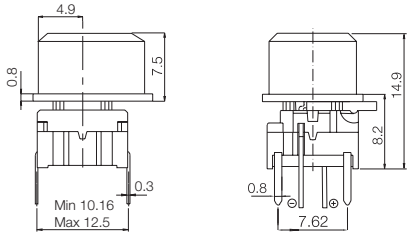

PCB layout (top view)

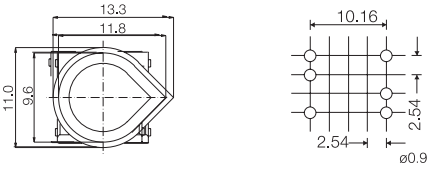

Dimensions (SMD)

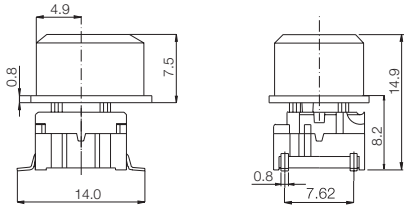

PCB layout

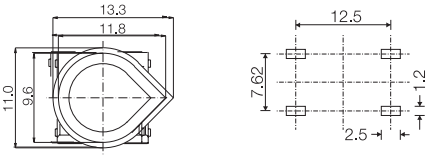

8 different position options

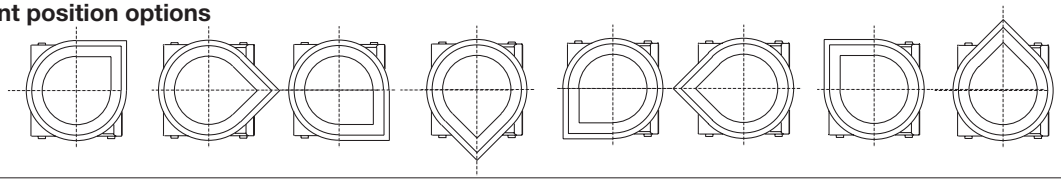

How to order

3 F			+	1 N	
Switch	**Mounting** **T** through-hole **S** surface mount	**L 6** low temp. **H 9** high temp.		**Cap**	**00** blue **03** grey **04** yellow **08** red **09** black

3 F	T			+	1 N	
Switch	**Mounting** **T** through-hole	**L 6** low temp. **H 9** high temp.	**LED** **00** blue **20** green **40** yellow **60** white **80** red **2040** green/yellow **8020** red/green **8040** red/yellow		**Cap**	**10** frosted blue **12** frosted green **14** frosted yellow **16** frosted white **18** frosted red

Keycaps shown on this page can also be used on
illumec™ switch 4F - see page 13

Ordering example: 3FTL6 + 1N09 or 3FTL680 + 1N18

For updates of products and/or changes of specifications please see **www.mec.dk**

multimec® 3F + 1D/1E/1F

Technical Data

- through-hole or SMD
- 50mA/24VDC
- single pole/momentary
- 10.000.000 operations life time
- IP67 sealing
- temperature range:
  low temp: -40/+115°C
  high temp: -40/+160°C



Dimensions (through-hole)

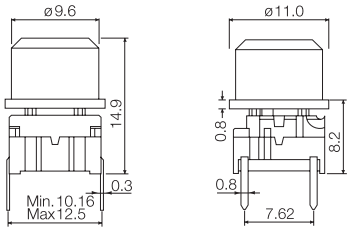

PCB layout

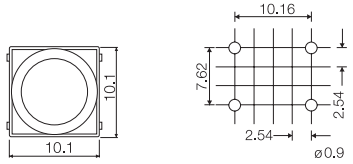

Dimensions (w/LED)

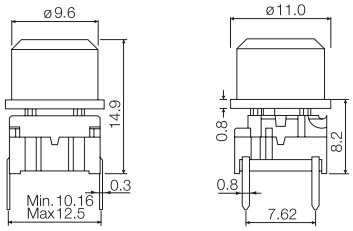

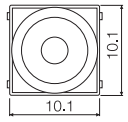

PCB layout
(top view)

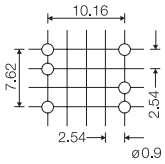

Dimensions (SMD)

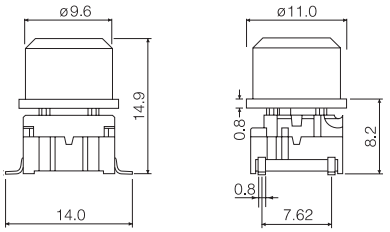

PCB layout

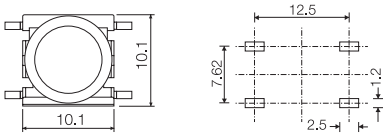

How to order

3 F — **Switch**

Mounting
T through-hole
S surface mount

L 6 low temp.
H 9 high temp.

+

1 D — **Cap**



00 blue
02 green
03 grey
04 yellow
06 white
08 red
09 black
30 ultra blue
40 dusty blue
42 aqua blue
32 mint green
33 tele grey
34 melon
38 noble red
50 metal dark blue
53 metal light grey
57 metal dark grey
58 metal bordeaux

3 F — **Switch**

T — **Mounting**
T through-hole

L 6 low temp.
H 9 high temp.

LED
00 blue
20 green
40 yellow
60 white
80 red
2040 green/yellow
8020 red/green
8040 red/yellow

+

Cap 1D



Cap 1E



Cap 1F



11 transparent
16 frosted white

00 blue
02 green
03 grey
04 yellow
04 white
08 red
09 black

Lens

1 transparent
2 green
4 yellow
6 frosted white
8 red

Keycaps shown on this page can also be used on
illumec™ switch 4F - see page 13

Ordering example: 3FTL620 + 1E032

For updates of products and/or changes of specifications please see **www.mec.dk**

multimec® 3F + 1K/1KB/1KC

Technical Data

- through-hole or SMD
- 50mA/24VDC
- single pole/momentary
- 10.000.000 operations life time
- IP67 sealing
- temperature range:
  low temp: -40/+115°C
  high temp: -40/+160°C



Dimensions 1K (through-hole)

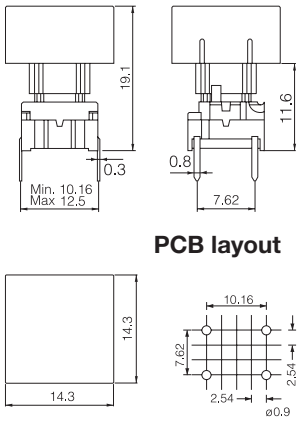

Dimensions 1KB (w/LED)

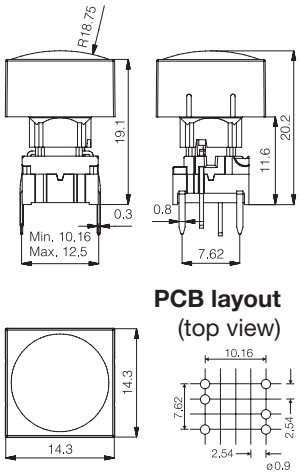

Dimensions 1KC (w/LED)

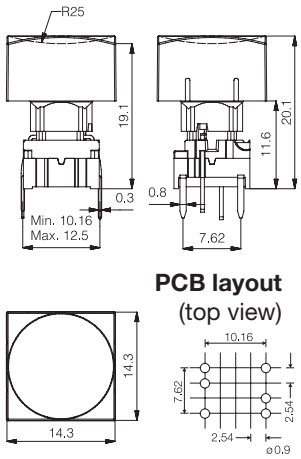

Dimensions 1K (SMD)

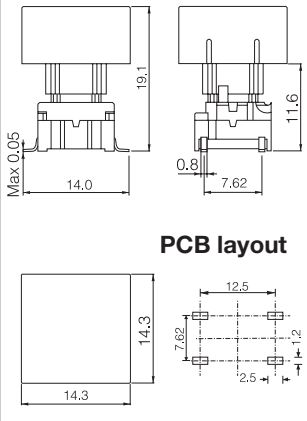

Dimensions (Bezel) (Optional)

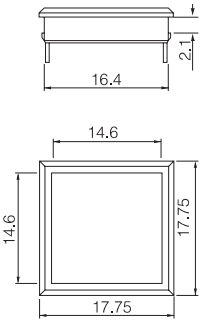

How to order

3F **Switch**

Mounting
T through-hole
S surface mount

L 6 low temp.
H 9 high temp.

\+ **1K 16** **Cap**

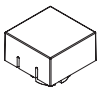

00 blue
02 green
03 grey
04 yellow
06 white
08 red
09 black

\+ **2K** **Bezel**

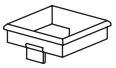

03 grey
06 white
08 red
09 black

3F **Switch**

T **Mounting**
T through-hole
S surface mount

L 6 low temp.
H 9 high temp.

LED
23 green
45 yellow
88 red

\+ **1116** **Cap** frosted white

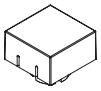

1K

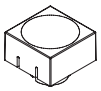

1KB

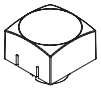

1KC

\+ **2K** **Bezel**

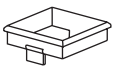

03 grey
06 white
08 red
09 black

The 1K caps consist of a transparent lid and a diffuser lens.
It is possible to make your own customized legend by placing a foil between the lid and the lens.

Keycaps shown on this page can also be used on
illumec™ switch 4F - see page 13

Ordering example: 3FTL688 + 1K1116

For updates of products and/or changes of specifications please see **www.mec.dk**

multimec® 3F + 1WA/1WD/1WP

Technical Data

- through-hole or SMD
- 50mA/24VDC
- single pole/momentary
- 10.000.000 operations life time
- IP67 sealing
- temperature range:
  low temp: -40/+115°C
  high temp: -40/+160°C



Dimensions (through-hole) 1WA

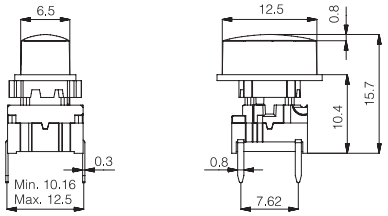

PCB layout

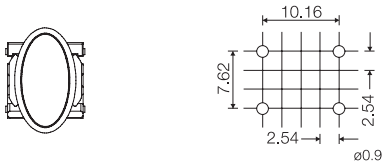

Dimensions (w/LED) 1WD

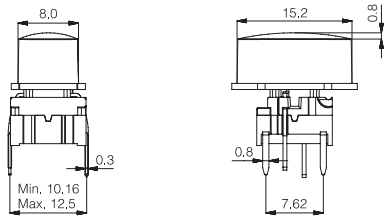

PCB layout (top view)

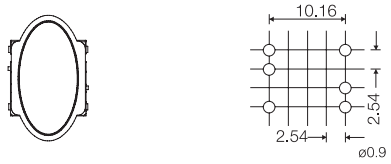

Dimensions (SMD) 1WP

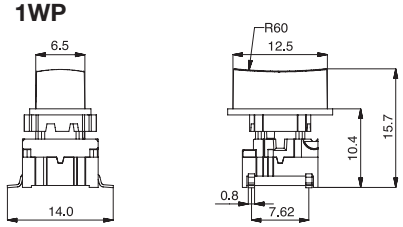

PCB layout

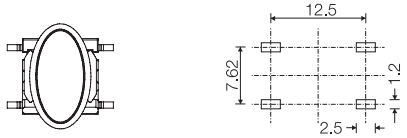

8 different position options

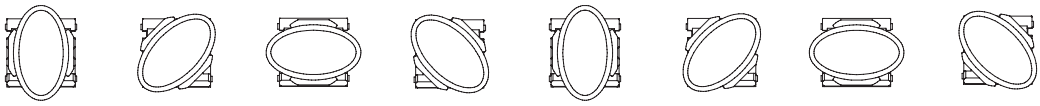

How to order

3 F	☐	☐☐	+	☐☐☐	☐☐
Switch	**Mounting** **T** through-hole **S** surface mount	**L 6** low temp. **H 9** high temp.		**Cap** **1WA** **1WD** **1WP**	**00** blue **03** grey **08** red **09** black **30** ultra blue **40** pigeon blue **42** aqua blue **53** metal light grey **57** metal dark grey

3 F	T	☐☐	☐☐	+	☐☐☐	☐☐
Switch	**Mounting** **T** through-hole	**L 6** low temp. **H 9** high temp.	**LED** **23** green **45** yellow **88** red		**Cap** **1WA** **1WD** **1WP**	**16** frosted white

Keycaps shown on this page can also be used on
illumec™ switch 4F - see page 13

Ordering example: 3FTL6 + 1WA09 or 3FTL680 + 1WP16

For updates of products and/or changes of specifications please see **www.mec.dk**

multimec® 3F + 1P/1Q/1R

Technical Data

- through-hole or SMD
- 50mA/24VDC
- single pole/momentary
- 10.000.000 operations life time
- IP67 sealing
- temperature range:
  low temp: -40/+115°C
  high temp: -40/+160°C



Dimensions (through-hole)

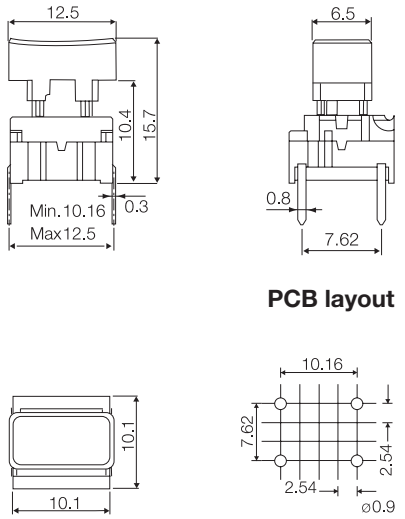

Dimensions (w/LED)

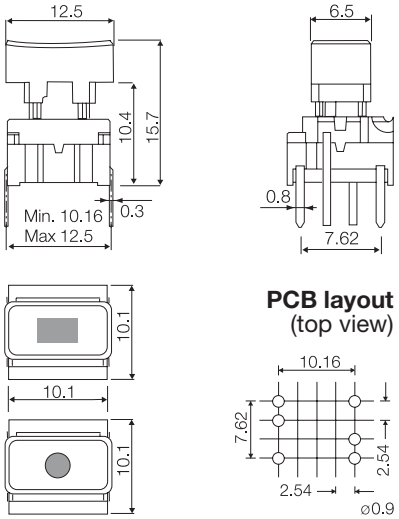

Dimensions (SMD)

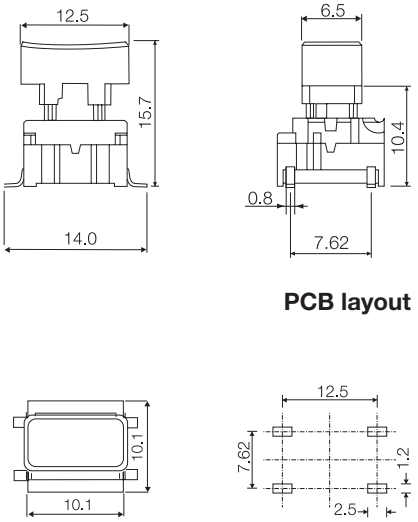

How to order

3 F			+	1 P	
Switch	**Mounting** **T** through-hole **S** surface mount	**L 6** low temp. **H 9** high temp.		**Cap**	**00** blue **02** green **03** grey **04** yellow **06** white **08** red **09** black

3 F	T			+			
Switch	**Mounting** **T** through-hole	**L 6** low temp. **H 9** high temp.	**LED** **00** blue **20** green **40** yellow **60** white **80** red **2040** green/yellow **8020** red/green **8040** red/yellow		**1Q**  **1R** 	**00** blue **03** grey **08** red **09** black	**Lens** **1** transparent **6** frosted white

Keycaps shown on this page can also be used on
illumec™ switch 4F - see page 13

Ordering example: 3FTL680 + 1Q091

For updates of products and/or changes of specifications please see **www.mec.dk**

multimec® 3F + 1T/1U/1V

Technical Data

- through-hole or SMD
- 50mA/24VDC
- single pole/momentary
- 10.000.000 operations life time
- IP67 sealing
- temperature range:
  low temp: -40/+115°C
  high temp: -40/+160°C



Dimensions (through-hole)

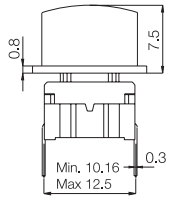

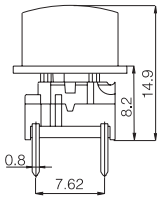

PCB layout

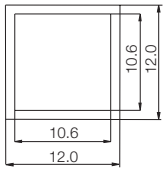

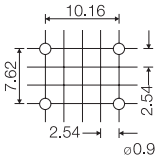

Dimensions (w/LED)

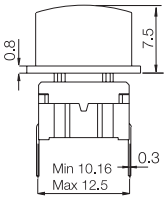

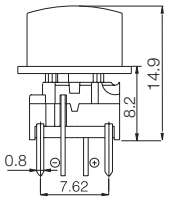

PCB layout
(top view)

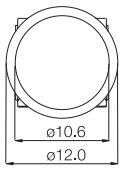

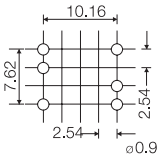

Dimensions (SMD)

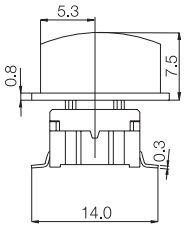

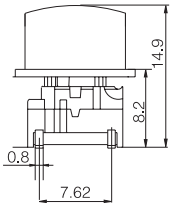

PCB layout

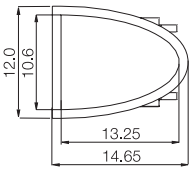

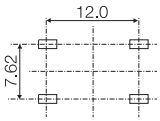

How to order

3 F	☐	☐☐	+	☐☐	☐☐
Switch	**Mounting** **T** through-hole **S** surface mount	**L 6** low temp. **H 9** high temp.		**Cap** **1T** **1U** **1V**	**00** blue **03** grey **08** red **09** black

3 F	T	☐☐	☐☐	+	☐☐	1 6
Switch	**Mounting** **T** through-hole	**L 6** low temp. **H 9** high temp.	**LED** **23** green **45** yellow **88** red		**Cap** **1T** **1U** **1V**	frosted white

Keycaps shown on this page can also be used on
illumec™ switch 4F - see page 13

Ordering example: 3FTL645 + 1V16

For updates of products and/or changes of specifications please see **www.mec.dk**

multimec® 3F + 1X

Technical Data

- through-hole or SMD
- 50mA/24VDC
- single pole/momentary
- 10.000.000 operations life time
- IP67 sealing
- temperature range:
  low temp: -40/+115°C
  high temp: -40/+160°C



Dimensions (through-hole)

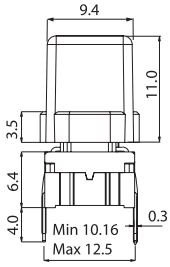

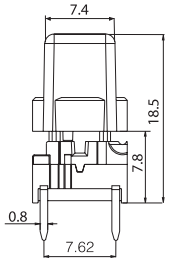

PCB layout

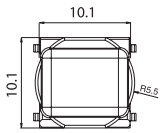

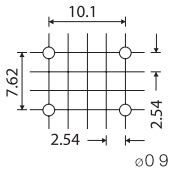

Dimensions (w/LED)

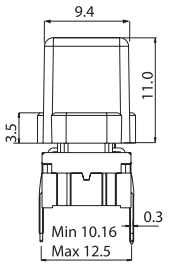

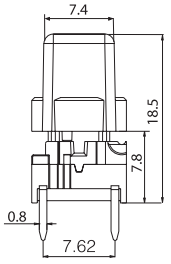

PCB layout (top view)

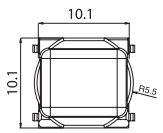

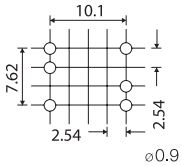

Dimensions (SMD)

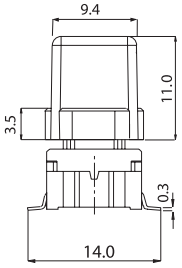

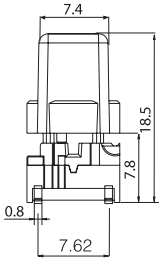

PCB layout

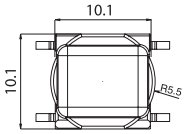

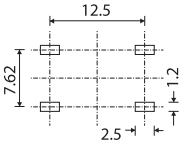

How to order

3 F	☐	☐☐ +	1 X	☐☐
Switch	**Mounting** **T** through-hole **S** surface mount	**L 6** low temp. **H 9** high temp.	**Cap**	**00** blue **02** green **03** grey **04** yellow **06** white **08** red **09** black



30 ultra blue
40 dusty blue
42 aqua blue
32 mint green
33 tele grey
34 melon
38 noble red

50 metal dark blue
53 metal light grey
57 metal dark grey
58 metal bordeaux

3 F	T	☐☐	☐☐☐☐ +	1 X	☐☐
Switch	**Mounting** **T** through-hole	**L 6** low temp. **H 9** high temp.	**LED** **00** blue **20** green **40** yellow **60** white **80** red **2040** green/yellow **8020** red/green **8040** red/yellow	**Cap**	**11** transparent **16** frosted white



Keycaps shown on this page can also be used on
illumec™ switch 4F - see page 13

Ordering example: 3FTL6 + 1X09 or 3FTL680 + 1X11

For updates of products and/or changes of specifications please see **www.mec.dk**

multimec® 3F + 1S + 2S

Technical Data

- through-hole or SMD
- 50mA/24VDC
- single pole/momentary
- 10.000.000 operations life time
- IP67 sealing
- temperature range:
  low temp: -40/+115°C
  high temp: -40/+160°C



Dimensions (through-hole)

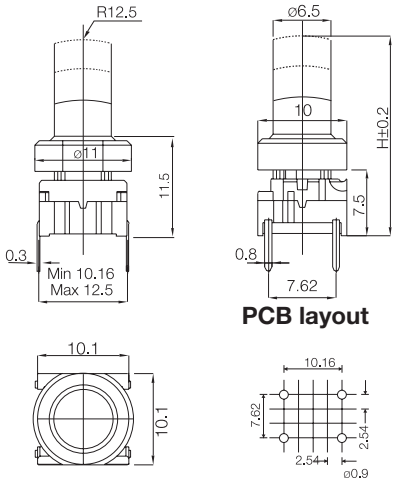

PCB layout

Dimensions (w/LED)

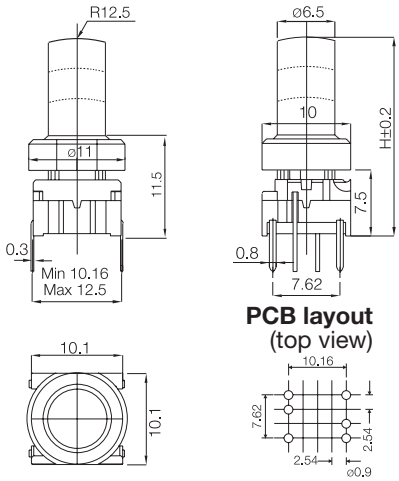

PCB layout
(top view)

Dimensions (SMD)

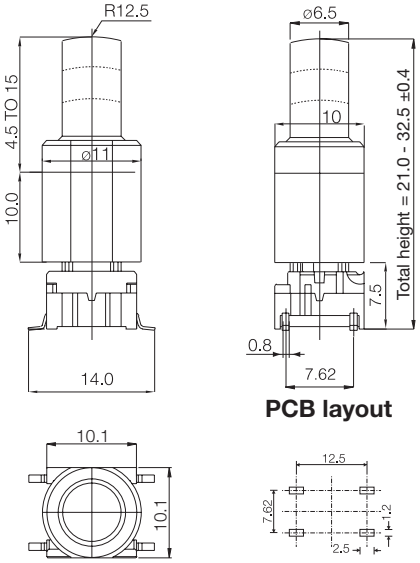

PCB layout

How to order

3 F			+	1 S 0 9 -	.	+	2 S 0 9 -	. 0
Switch	**Mounting** **T** through-hole **S** surface mount	**L 6** low temp. **H 9** high temp.		**Cap black**	**Height** **16.0** **19.0** **22.5**		**Extender black**	**Height** **05.0** (Optional) **06.0** Adds 5-10mm to **07.0** total height **08.0** **09.0** **10.0**



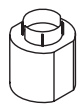

3 F	T			+	1 S 1 1 -	.
Switch	**Mounting** **T** through-hole	**L 6** low temp. **H 9** high temp.		**LED** **00** blue **20** green **40** yellow **60** white **80** red **2040** green/yellow **8020** red/green **8040** red/yellow		**Cap Transparent**	**Height** **16.0** **19.0** **22.5**



Customised Heights:

3F+1S is available in any height from 12.0 to 24 mm.

3F+1S+2S is available in any height from 17.0 to 34 mm.

Min. height for 1S11 is 16.0 and for 1S09 min height is 12.0 mm.

Min. order qty. for custom heigths is 2.000 pcs.

For heights less than 12.0 mm, please refer to 3E switch range.

Keycaps shown on this page can also be used on
illumec™ switch 4F - see page 13

Ordering example: 3FTL640 + 1S11-19.0

For updates of products and/or changes of specifications please see **www.mec.dk**

multimec® Aquamec™



Specifications switches:

- through-hole or SMD
- 50mA/24VDC
- single pole/momentary
- 10.000.000 operations life time
- IP67 sealing
- temperature range:
  low temp: -40/+115°C
  high temp: -40/+160°C

Specifications Sealing Boot:

- Operating temperature: -40/+85°C
- IP67 sealing
- sealing life time: 2.000.000 operations
- material: silicone

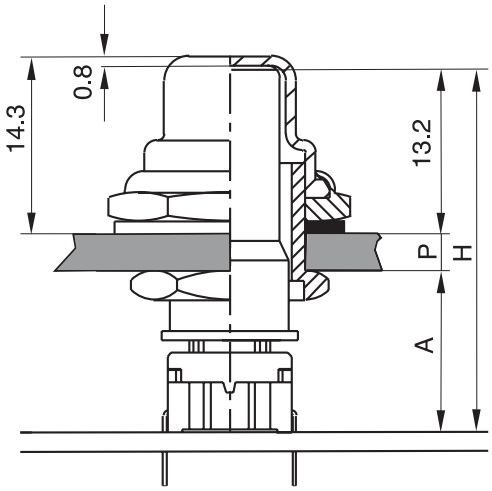

H= A+P+13.2

This leaves nominel 0.3 mm clearance between the top of the cap and the inner side of the sealing boot to accomplish assembly tolerances. **A** can be chosen between 10 -13 mm, we recommend 10 mm to reduce building height and optimize cap guidance.

A	P	CAP	H	BUSHING
10.0	1.0	AQCXX-24.2	24.2	AQN-0.5
10.0	2.0	AQCXX-25.2	25.2	AQN-0.5
10.0	3.0	AQCXX-26.2	26.2	AQN-2.5
10.0	4.0	AQCXX-27.2	27.2	AQN-2.5

Cap is available in black (09) or transparent (11).
The dimension H is the overall height of the switch+cap.
Bushing AQN-0.5 accepts panel thickness (P) 0.5-2.5 mm.
Bushing AQN-2.5 accepts panel thickness (P) 2.5-4.0 mm.
Panel cut out ø 12.0 ± 0.2.

How to order

3 F □ □□ + AQN - □·□ + AQC □□ - □□·□ + AQB01 □□

Switch

Mounting
T through-hole
S surface mount

L 6 low temp.
H 9 high temp.

Bushing



Panel
0.5
2.5

Cap
09 black
11 transparent



Overall Height
24.2
25.2
26.2
27.2

Sealing boot, incl. sealing ring
09 black
11 transparent



3 F T □□ □□□□ + AQN - □·□ + AQC □□ - □□·□ + AQB01 □□

Switch

Mounting
T through-hole

L 6 low temp.
H 9 high temp.

LED
00 blue
20 green
40 yellow
60 white
80 red
2040 green/yellow
8020 red/green
8040 red/yellow

Bushing



Panel
0.5
2.5

Cap
11 transparent



Overall Height
24.2
25.2
26.2
27.2

Sealing boot, incl. sealing ring
11 transparent

Keycaps shown on this page can also be used on
illumec™ switch 4F - see page 13

Ordering example: AQB0109 + AQC09-27.2 + AQN-2.5 + 3FTL6

For updates of products and/or changes of specifications please see **www.mec.dk**

multimec® Legends



All standard legends are white on black caps.
The size of the legends listed may not correspond to the actual size.
Please ask your local distributor, if you do not find what you need on the list. New legends may have been added after this catalogue was printed.
Custom legends and other colour combinations are available, please contact your local distributor.

Note!

Position of Cap 1A/1B

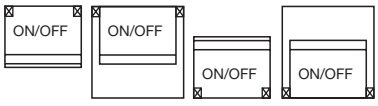

UP 1A09XU | UP 1B09XU | DOWN 1A09XD | DOWN 1B09XD

Orientation of Switch for 1A/1B

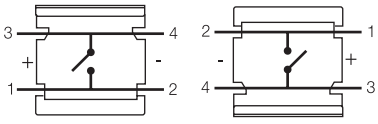

UP DOWN

For 1A/1B the orientation shown above is standard.

Please consider the switch orientation you require before specifying legend orientation.

Position of Cap 1D/1F



Orientation of Switch for 1D/1F

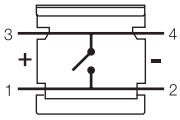

For the 1D and 1F caps the orientation shown above is standard.

Please consider the switch orientation you require before specifying legend orientation.

Standard Keycap Legends

	Part no.							
						 Reverse Print		
LEGEND	**1A09XU_**	**1A09XD_**	**1B09XU_**	**1B09XD_**	**1D09_**	**1F096_**	**1ZB09XD_**	**1ZC09_**
0	000	000	000	000	000	000		
1	001	001	001	001	001	001		
2	002	002	002	002	002	002		
3	003	003	003	003	003	003		
4	004	004	004	004	004	004		
5	005	005	005	005	005	005		
6	006	006	006	006	006	006		
7	007	007	007	007	007	007		
8	008	008	008	008	008	008		
9	009	009	009	009	009	009		
A	010	010	010	010				
B	011	011	011	011				
C	012	012	012	012				
D	013	013	013	013				
#	107	107	107	107	107	107		
*****	019	019	019	019	019	019		
⌑	016	016	016	016				
→	033	033	033	033	033			
←	133	133	133	133	133			
↑	034	034	034	034	034			
↓	134	134	134	134	134			
↵	135	135	135	135	135	135		
+	054	054	054	054				
–	059	059	059	059				
•	056	056	056	056				
▲							136	
⏻	123	123	123	123	123	123		123*
START	031	031	031	031				
CLEAR	036	036	036	036				
LOAD	037	037	037	037				
RESET	038	038	038	038				038
CANCEL	048	048	048	048				
ENTER								105
OK								118
SET								119
MENU								120
FUNC								121
HOME								122

* 1ZC16 for illumination

For updates of products and/or changes of specifications please see **www.mec.dk**

Applications with mec switches

Studio Equipment





Navimec, 3A+1ZA

Security Access Control



Navimec,3A+1B+2A,3A+1A

Digital Microscope





3F+1D

Barcode Reader



3C in-moulded

Pump Control Unit



3E

Space Shuttle Internal Communication





Unimec 15501+16300+16310

Control for Video Camera in Police Cars



3A+1A, 1H

Conference Systems





3F+1ZA,1ZC 3A+1H,1M

Door Entry Control





3F+1T,1U,1V,1F

For updates of products and/or changes of specifications please see **www.mec.dk**

Applications with mec switches

Police Speed Control



3F+1D, 1T, 1V

Control Panel for Boats







3F+1U

Scooter for Disabled People





3F+1D

Defillibrator



3C under foil

Tree Felling Equipment





3E

Flight Simulators



3F+1P 3F+1P,1D

Military Handheld Computer







3C

Car Operation Panel for Disabled People





3F+1ZA, 1ZC Navimec, 3F+1ZC

Mixing Console





3F+1K,1E

For updates of products and/or changes of specifications please see **www.mec.dk**

multimec® 3F + 1GA/1GC

Technical Data

- through-hole or SMD
- 50mA/24VDC
- single pole/momentary
- 10.000.000 operations life time
- IP67 sealing
- temperature range:
  low temp: -40/+115°C
  high temp: -40/+160°C



Dimensions (through-hole)

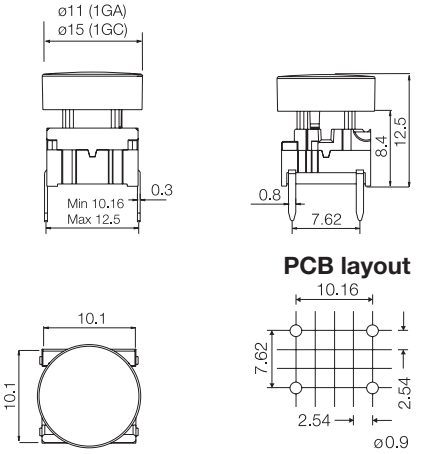

Dimensions (w/extender)

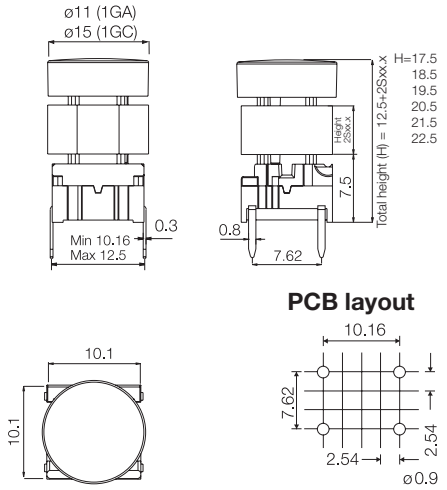

Dimensions (SMD)

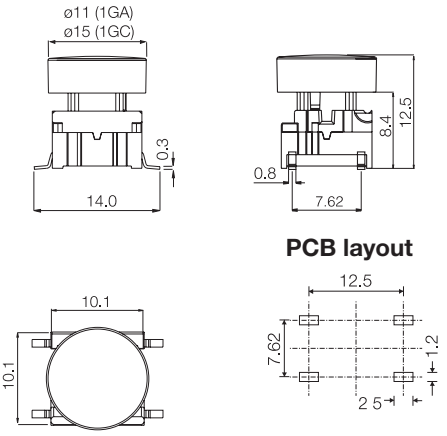

How to order

3 F	☐	☐☐	+	1 G A 0 9	+	2 S 0 9 - ☐☐ . 0
Switch	**Mounting** **T** through-hole **S** surface mount	**L 6** low temp. **H 9** high temp.		**Cap black**		**Extender black**



1 G C 0 9

Cap black





(Optional)
Adds 5-10 mm
to total height.

Height
05.0
06.0
07.0
08.0
09.0
10.0

Keycap	Variable Extender	H (height) mm	Example
1GA/1GC		12.5	H 1
1GA/1GC	2S09-05.0	17.5	H 2
	2S09-06.0	18.5	
	2S09-07.0	19.5	
	2S09-08.0	20.5	
	2S09-09.0	21.5	
	2S09-10.0	22.5	H 3

H = Overall height

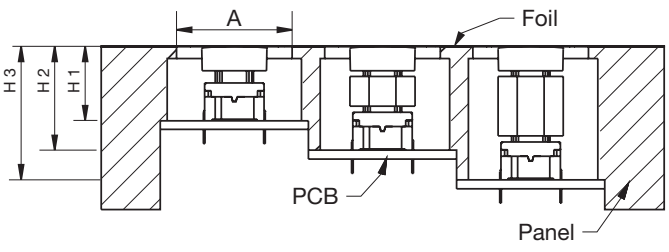

Overall heights below 12.5 mm - Please see Multimec® versions 3C and 3E.
All 2S09 extenders are stackable giving the possibility to match most overall heights.
A = We recommend you to allocate enough space for travel of the foil and leave the area free from adhesive.
Switch travel = 1 mm.
H = We recommend you to calculate this dimension from the top of the PCB to the inner top of the panel.

Ordering example: 3FTL6 + 1GA09 or 3FTL6 + 2S09-07.0 + 1GC09

For updates of products and/or changes of specifications please see **www.mec.dk**

multimec® 3C/3E

Technical Data

- through-hole or SMD
- 50mA/24VDC
- single pole/momentary
- 10.000.000 operations life time
- IP67 sealing
- temperature range:

low temp:	-40/+115°C
high temp:	-40/+160°C
actuator:	
in PPS:	-40/+160°C
in polycarbonate:	-40/+85°C



Standard 3C

Dimensions (through-hole)

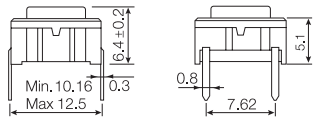

Dimensions (SMD)

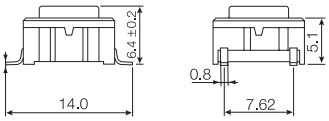

PCB layout

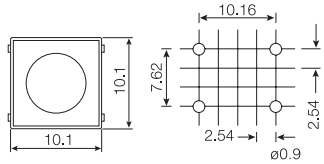

PCB layout

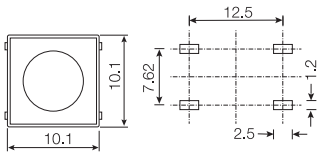

Variable heights 3E

Dimensions (through-hole)

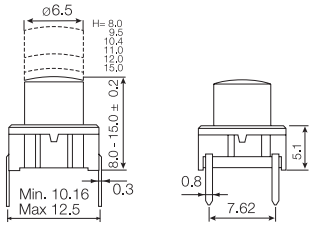

Dimensions (SMD)

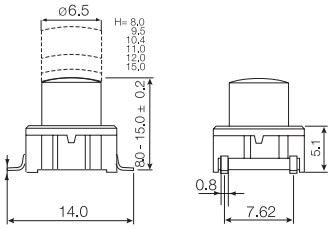

PCB layout

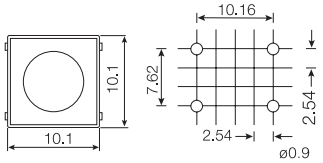

PCB layout

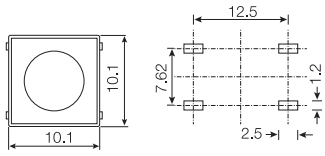

How to order

3C

Switch

Mounting
T through-hole
S surface mount

L 6 low temp. white
L 9 low temp. black
H 9 high temp.

3E

Switch

Mounting
T through-hole
S surface mount

L low temp.
H high temp.

9 Black
Actuator made of PPS

-

Standard overall height
08.0
09.5
10.4
11.0
12.0
15.0

Custom heights:
3E is available in any height from 08.0 to 15.0mm.
Min. order qty. for custom heights is 2.000 pcs.

3E

Switch

Mounting
T through-hole

L low temp.

20 blue
23 grey
24 yellow
28 red
29 black
Actuator made of polycarbonate

-

Standard overall height
08.0
09.5
10.4
11.0
12.0
15.0

Switch and 3E actuator can be delivered unassembled.
The actuators made of polycarbonate can also be used for high temperature switches, however they must be mounted after soldering and the temp. range will be reduced to 85°C.

Ordering example: 3CTL6 and 3ETL9-09.5 or 3ETL23-08.0

For updates of products and/or changes of specifications please see **www.mec.dk**

varimec™ double variability

Technical Data

- through-hole or SMD
- 50mA/24VDC
- single pole/momentar y
- 10.000.000 operations life time
- IP67 sealing
- temperature range switch:
  low temp: -40/+115ºC
  high temp: -40/+160 ºC
- temperature range cap:
  -40/+160 ºC



Round ø5.2

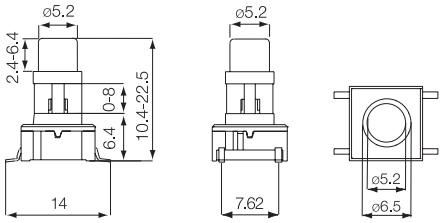

Round ø7.8

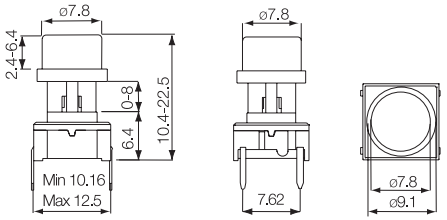

Round ø11.6

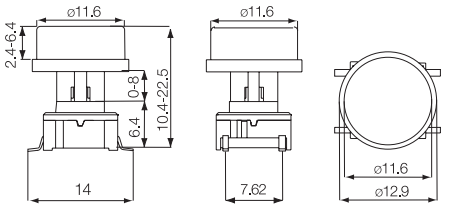

PCB Layout (through-hole)

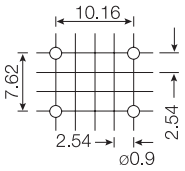

PCB Layout (SMD)

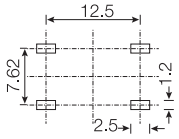

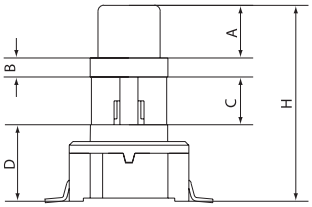

The Concept

H = Overall heights from 10.4-22.5
A = Variable height from 2.4 to 6.4
A cannot exceed **H** - 8.0
B = Fixed recess 1.6
D = Fixed switch 6.4
C = Variable from 0-8.1
C = H-A-B-D
All measurements in mm

How to order

Switch	Shape and Size	Colour Codes	Overall Height H	Height above recess A	Tape*
3ETL	**A** 5.2 Round	**60** blue	**A** 10.4	**A** 2.4	**R**
3ESH	**E** 7.8 Round	**63** grey	**B** 11.0	**B** 3.0	
3ETH	**K** 11.6 Round	**64** yellow	**C** 12.0	**C** 3.5	
		68 red	**D** 12.5	**D** 4.0	
		69 black	**E** 13.0	**E** 4.5	
			F 14.0	**F** 5.0	
			G 15.0	**G** 5.6	
			H 16.0	**H** 6.4	
			J 19.0		
			K 22.5		

Cap alone:
Instead of part no. for switch please use 3E- and then same as above

Examples Switch and Cap:
3ETLE64CC = Switch 3ETL, 7.8 Round Cap, Yellow, Overall Height 12.0, Height above recess 3.5, (Height under recess 0.5).

Example Cap Alone:
3E-E63FF = Cap, 7.8 Round, Grey, Overall Height with switch 14.0, Height above recess 5.0, (Height under recess 1.0).
Min. order is 2.000 pcs. per shape, size and heights for parts mentioned above.
For heights not mentioned in the list a start-up fee will apply.
*Only overall height up to 12.5mm can be supplied on tape.

For updates of products and/or changes of specifications please see **www.mec.dk**

varimec™ double variability

Technical Data

- through-hole or SMD
- 50mA/24VDC
- single pole/momentary
- 10.000.000 operations life time
- IP67 sealing
- temperature range switch:
  low temp: -40/+115°C
  high temp: -40/+160°C
- temperature range cap:
  -40/+160°C

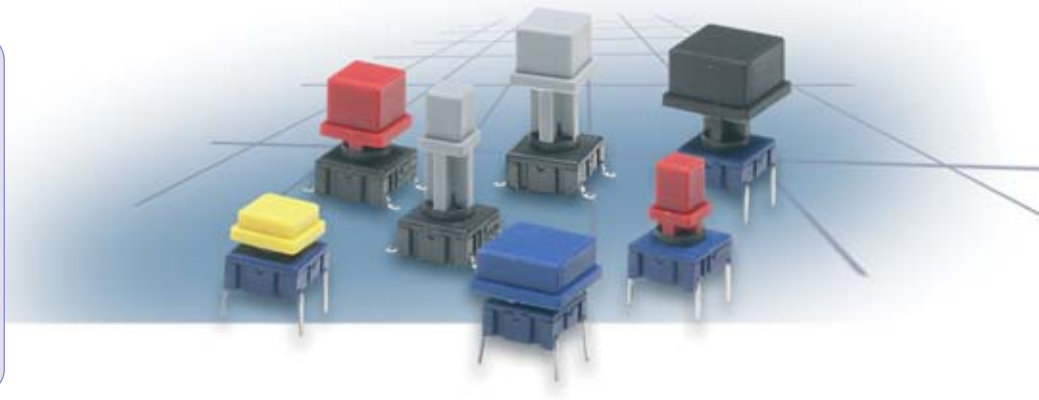

Square 5.2

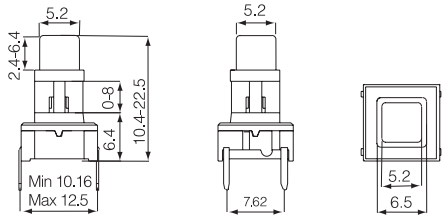

Square 7.8

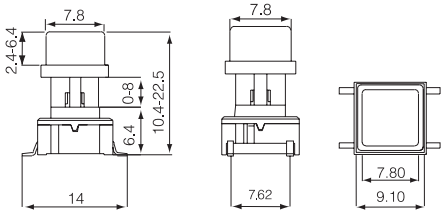

Square 11.6

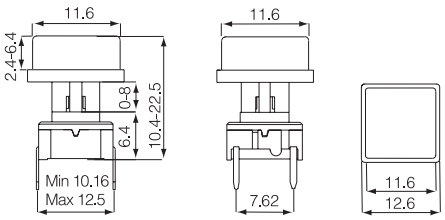

PCB Layout (through-hole)

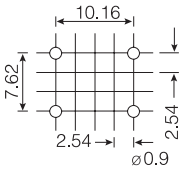

PCB Layout (SMD)

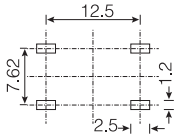

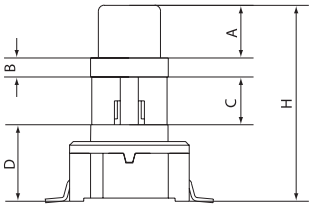

The Concept

H = Overall heights from 10.4 - 22.5
A = Variable height from 2.4 to 6.4
A cannot exceed **H** - 8.0
B = Fixed recess 1.6
D = Fixed switch 6.4
C = Variable from 0-8.1
C = H-A-B-D
All measurements in mm

How to order

Switch	Shape and Size	Colour Codes	Overall Height H	Height above recess A	Tape*
3ETL	**B** 5.2 Square	**60** blue	**A** 10.4	**A** 2.4	**R**
3ESH	**F** 7.8 Square	**63** grey	**B** 11.0	**B** 3.0	
3ETH	**L** 11.6 Square	**64** yellow	**C** 12.0	**C** 3.5	
		68 red	**D** 12.5	**D** 4.0	
		69 black	**E** 13.0	**E** 4.5	
			F 14.0	**F** 5.0	
			G 15.0	**G** 5.6	
			H 16.0	**H** 6.4	
			J 19.0		
			K 22.5		

Cap alone:
Instead of part no. for switch please use 3E- and then same as above

Examples Switch and Cap:
3ESHB60AA = Switch 3ESH, 5.2 Square Cap, Blue, Overall Height 10.4, Height above recess 2.4, (Height under recess 0).

Example Cap Alone:
3E-E63FF = Cap, 7.8 Square, Grey, Overall Height with switch 14.0, Height above recess 5.0, (Height under recess 1.0).
Min. order is 2.000 pcs. per shape, size and heights for parts mentioned above.
For heights not mentioned in the list a start-up fee will apply.
*Only overall height up to 12.5 mm can be supplied on tape.

For updates of products and/or changes of specifications please see **www.mec.dk**

multimec® Right Angle Switches

Technical Data

- through-hole only
- 50mA/24VDC
- single pole/momentary
- 10.000.000 operations life time
- IP67 sealing
- temperature range:
  low temp: -40/+115°C



Dimensions 3CTRAS

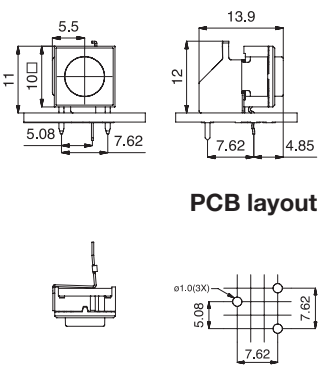

Dimensions 3ETRAS

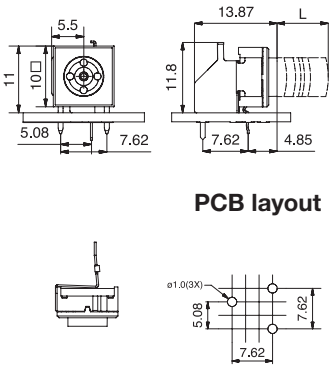

Dimensions 3FTRAS

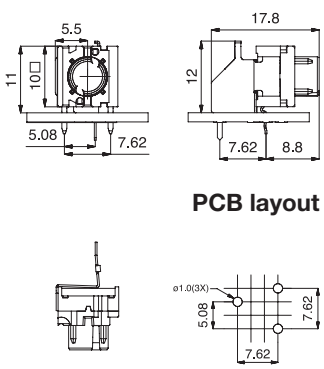

Dimensions 3FTRAS w/LED

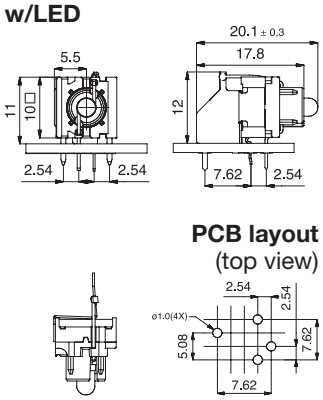

How to order

3 ☐ — **Switch**
3C
3F

T — **Mounting**
T through-hole

L 6 — **L 6** low temp.

R A S — Right angle support

3FTL6RAS - for caps 1D-1K-1P-1S see page 31

3 E — **Switch**

T — **Mounting**
T through-hole

Switch and 3E actuator can be delivered unassembled.

L — **L** low temp.

☐☐
9 black
20 blue
23 grey
24 yellow
28 red
29 black

Actuator made of PPS

Two digit colour code means actuators made of polycarbonate

-

☐.☐ R A S — **Actuator height**
1.6
3.1
4.0
4.6
5.6
8.6

3 F — **Switch**

T — **Mounting**
T through-hole

L 6 — **L 6** low temp.

☐☐☐☐ — **LED**
00 blue
20 green
40 yellow
60 white
80 red
2040 green/yellow
8020 red/green
8040 red/yellow

R A S
Right angle support

3FTL6RAS w/LED can be used with the keycaps:
1D,1E,1F,1K,1N,1Q,1R,1S, 1T, 1U, 1V, 1WA, 1WD, 1WP, 1X

Ask for drawings/dimensions for these keycaps with 3FTL6RAS w/LED

Ordering example: 3FTL620RAS + 1Q096

For updates of products and/or changes of specifications please see **www.mec.dk**

multimec® RAS + 1D/1K/1P/1S

Technical Data

- through-hole only
- 50mA/24VDC
- single pole/momentary
- 10.000.000 operations life time
- IP67 sealing
- temperature range:
  low temp: -40/+115°C



Dimensions 1D

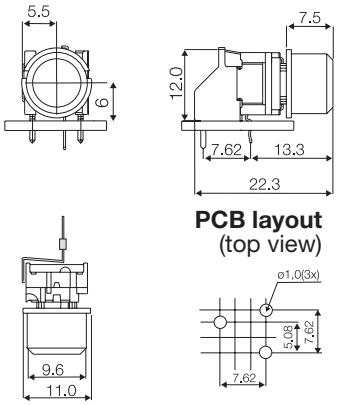

Dimensions 1K

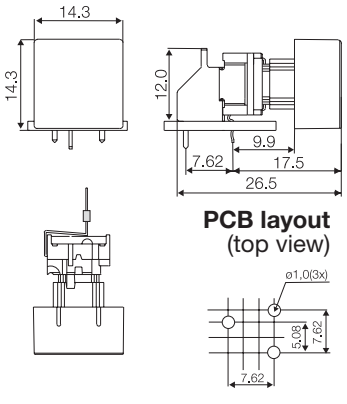

Dimensions 1P

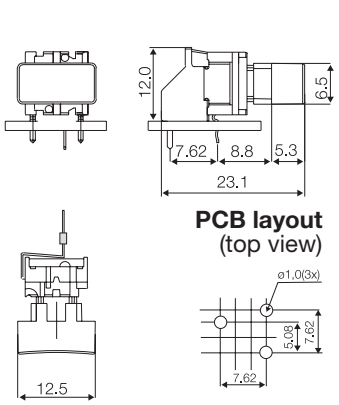

Dimensions 1S

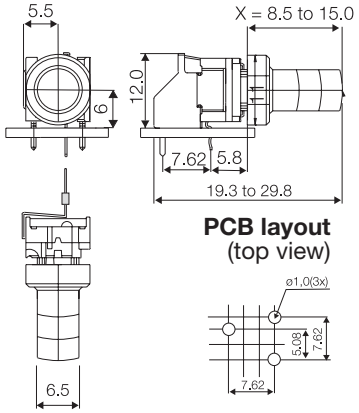

How to order

3FT L6 RAS +

Switch

Mounting
T through-hole

L 6 low temp.

Right angle support

1D

Cap



00 blue	**30** ultra blue	**50** metal dark blue
02 green	**40** dusty blue	**53** metal light grey
03 grey	**42** aqua blue	**57** metal dark grey
04 yellow	**32** mint green	**58** metal bordeaux
06 white	**33** tele grey	
08 red	**34** melon	
09 black	**38** noble red	

1P

Cap



00 blue
03 grey
08 red
09 black

1K16

Cap



00 blue
02 green
03 grey
04 yellow
06 white
08 red
09 black

2K

Bezel

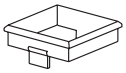

03 grey
06 white
08 red
09 black

1S09-

Cap black



H	X *
16.0	8.5
19.0	11.5
22.5	15.0

Other keycaps such as 1GA, 1GC, 1N, 1T,1U,1V, 1WA, 1WD, 1WP and 1X can be used on 3FTL6RAS. It may require reducing the size of the PCB to the front side of the switch body to avoid the cap touching the PCB. Ask for drawings/dimensions for these keycaps with 3FTL6RAS.

Please also see 3FTL6RAS with LED on page 30.

*Any cap height X from 8.5 to 15.0 mm is available.
Please order 1S09-H, where H = X+7.5 mm

Min. order quantity for custom heights is 2.000 pcs.

Ordering example: 3FTL6RAS+1K0016 + 2K03

For updates of products and/or changes of specifications please see **www.mec.dk**

multimec® basic switch modules

Through-hole Versions

3A		3C	3E	3F		
For 1A/1B/1M/1ZA/1ZB	w/LED for 1C/1H		For 3E actuators/Varimec	For 1D/1K/1N/1P/1S/1T/ 1U/1V/1WA/1WD/1WG/ 1WP/1X/1ZC/1GA/1GC	w/LED for 1D/1E/1F/1N/1Q/1R/ 1S/1X	w/LED for 1K /1KB/1KC/1T/1U/1V/ 1WA/1WD/1WP
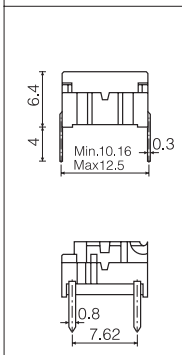	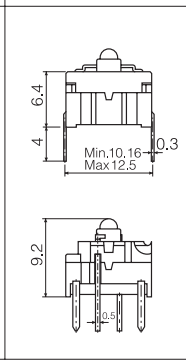	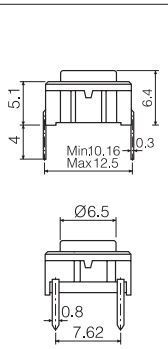	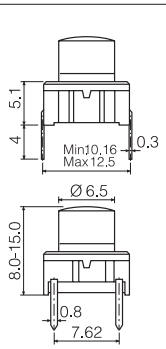	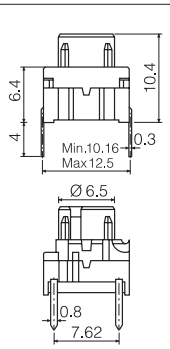	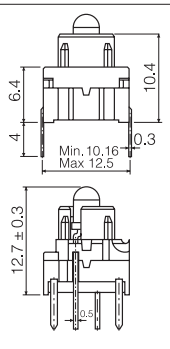	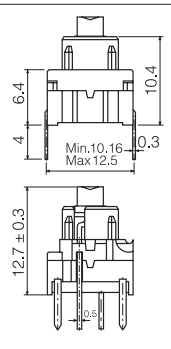

Standard Versions						
3ATL6 3ATH9	3ATL600/20/40/80	3CTL6/3CTL9 3CTH9	3ETLXX-H* 3ETHXX-H*	3FTL6 3FTH9	3FTL600/20/40/60/80/ 2040/8020/8040	3FTL623/45/88

* 3E available in 6 standard heights: 08.0, 09.5, 10.4, 11.0, 12.0, 15.0 mm. Other heights between 08.0 and 15.0 mm are available upon request.

Specials: Gold contacts, quiet version and actuation force other than 3.0N

Surface Mount Versions

3A	3C	3E	3F
For 1A/1B/1M/1ZA/1ZB		For 3E actuators/ Varimec	For 1D/1K/1N/1P/1S/1T/ 1U/1V/WA/1WD/1WP/ 1X/1ZC/1GA/1GC
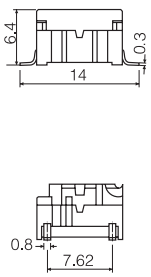	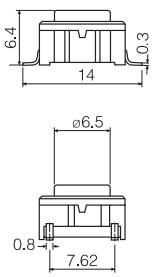	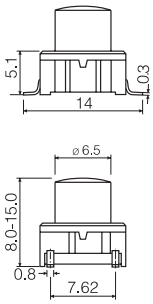	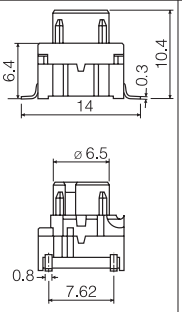

Standard Versions			
3ASH9/3ASH9R	3CSH9/3CSH9R	3ESH9/3ESH9R	3FSH9/3FSH9R

illumec™ Through-hole Versions

4AT w/LEDs	4FT w/LEDs
For 1C/1H	For 1D/1E/1F/1K/1KB/1KC/ 1N/1Q/1R/1S/1T/1U/1V/ 1WA/1WD/1WP/1X
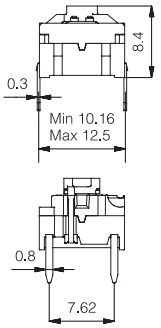	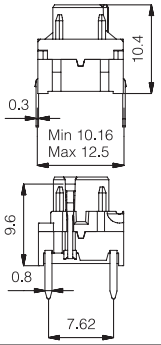

Standard Versions	
4ATH901/22/42/61/82/ 2242/8222/8242	4FTH901/22/42/61/82/ 2242/8222/8242

illumec™ Surface Mount Versions

4AS w/LEDs	4FS w/LEDs
For 1C/1H	For 1D/1E/1F/1K/1KB/1KC/ 1N/1Q/1R/1S/1T/1U/1V/ 1WA/1WD/1WP/1X
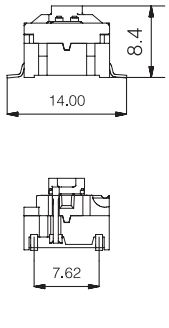	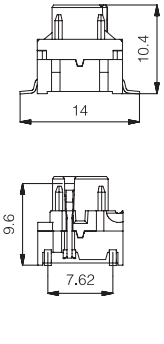

Standard Versions	
4ASH901/22/42/61/82/ 2242/8222/8242	4FSH901/22/42/61/82/ 2242/8222/8242

Co-planarity = ≤ 0.05

Right Angle Versions

3C	3E	3F	3F w/LED
	For 3E actuators/ Varimec	For 1D/1K/1N/1P/1S/1T/ 1U/1V/1W/1WA/1WD/ 1WP1X/1ZC/1GA/1GC	For 1D/1E/1F/1N/1Q/ 1R/1S/1X
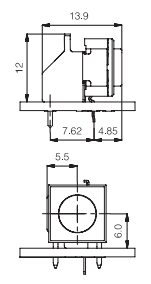	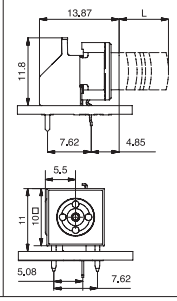	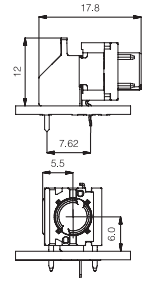	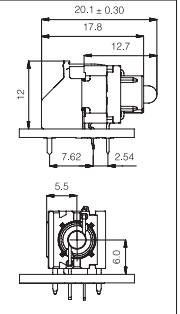

Standard Versions			
3CTL6RAS	3ETXX-X.XRAS	3FTL6RAS	3FTL600/20/40/60/80/ 2040/8020/8040RAS

multimec® Cross Section

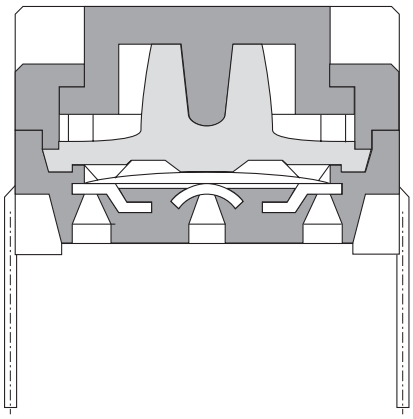

DIMENSIONS (mm) Unless otherwise specified, all tolerances ± 0.2

For updates of products and/or changes of specifications please see **www.mec.dk**

multimec® basic switches and tape & reel

Recommended PCB layout

MULTIMEC®
topview

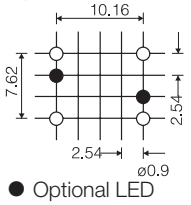

● Optional LED

MULTIMEC®
surface-mount solder pad

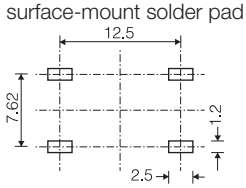

MULTIMEC®
Right Angle Version
topview

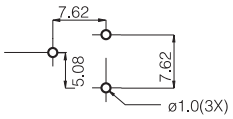

illumec™ PCB and Circuit Diagram

1 LED

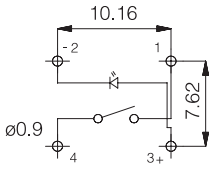

2 LEDS

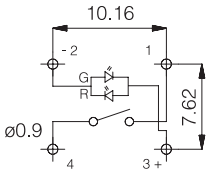

1 LED

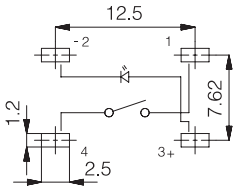

2 LEDS

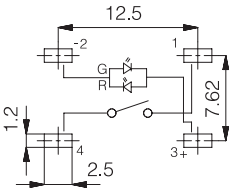

Operating Force
(typical example)

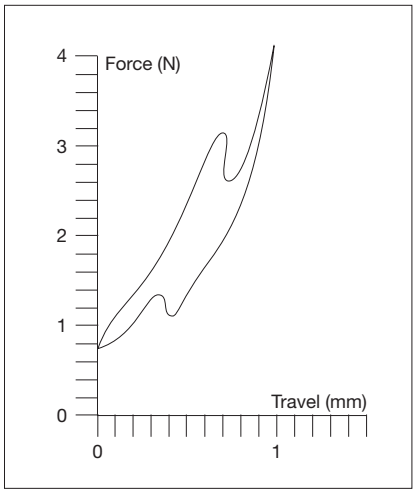



Tape and reel is available for the parts listed and has the following specifications:

Reel diameter	ø330mm
Tape width	24mm
Pitch	see list
Tape and reel material	antistatic or better
Quantity per reel	see list

3A/3C/3E/3F multimec® tape & reel

Part No.	Ordering Code	Pitch	Quantity per reel
3ASH9	3ASH9R	16	500
3CSH9	3CSH9R	16	500
3ESH9	3ESH9R	16	500
3ESH9-08.0	3ESH9R08.0	20	250
3ESH9-09.5	3ESH9R09.5	20	250
3ESH9-10.4	3ESH9R10.4	20	250
3ESH9-11.0	3ESH9R11.0	20	250
3ESH9-12.0	3ESH9R12.0	20	250
All varimec below R after the part no. 12.5		20	250
3FSH9	3FSH9R	20	250

4F illumec™ tape & reel

Part No.	Ordering Code	Pitch	Quantity per reel
4FSH901	4FSH901R	20	250
4FSH922	4FSH922R	20	250
4FSH942	4FSH942R	20	250
4FSH961	4FSH961R	20	250
4FSH982	4FSH982R	20	250
4FSH92242	4FSH92242R	20	250
4FSH98222	4FSH98222R	20	250
4FSH98242	4FSH98242R	20	250

Specifications are according to EIA 600481-3 and IEC 60286-3

Circuit Diagram

3A-3C-3E-3F

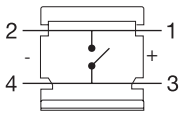

RAS

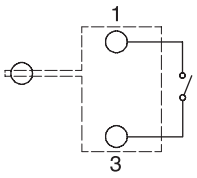

RAS w/LED

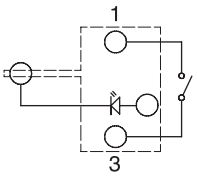

How to Assemble

multimec®
3AT + 1A/H + 2A/B

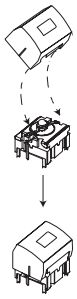

multimec®
3AT + 1B/C + 2A/B

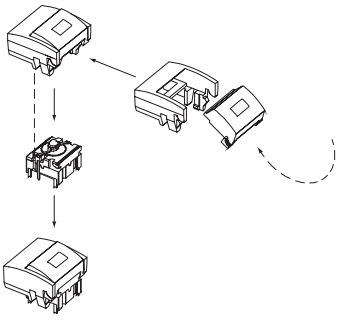

Mounting Tool for Through-hole versions

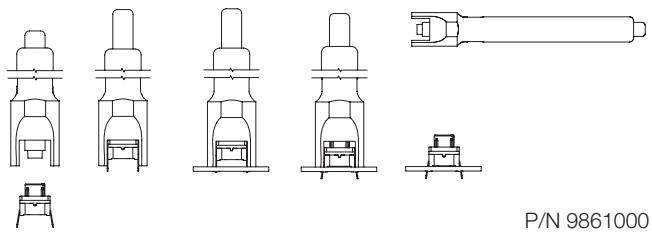

P/N 9861000

Specifications are subject to change without notice.

For updates of products and/or changes of specifications please see **www.mec.dk**

multimec® spacing

Basic switch spacing

through-hole

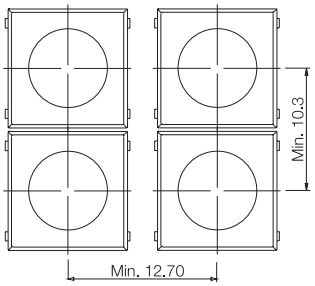

surface-mount

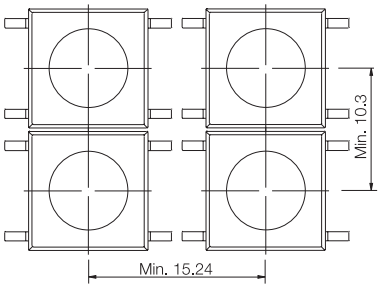

Recommended switch/cap spacing

Switch spacing

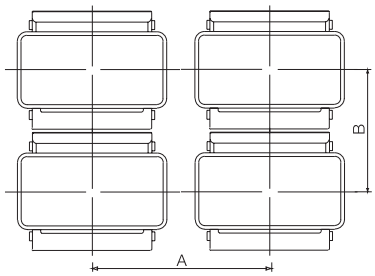

Cap dimension

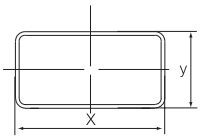

Panel cut-out

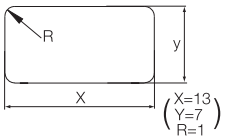

Panel Cut-out

1N **1V**

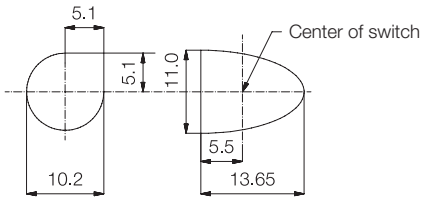

1T

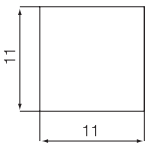

Spacing in mm

Spacing examples

multimec®
3AT + 1B/C + 2A/B

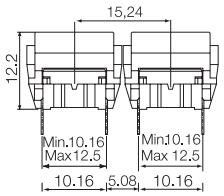

multimec®
3AS + 1B +2A/B
4AS +1B/1C + 2C/2D

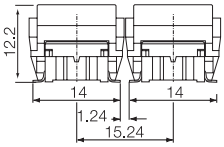

multimec®
3AT + 1A/H

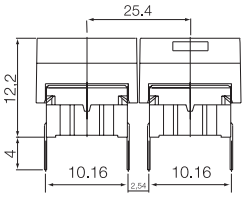

multimec®
3AT + 1M

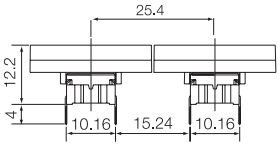

multimec®
1N + 1N + 1N

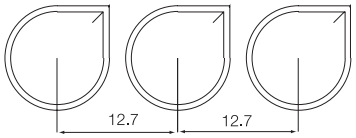

multimec®
1V + 1T + 1V

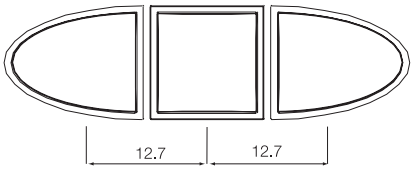

Cap series	Recommended* min. switch spacing AxB	Nominal cap dimension W x H	Recommended min. panel cut-out
1A	12.7 x 10.16	12.6 x 10.1	13.0 x 10.5
1B/1C+2A/2B	15.24 x 15.24	15.1 x 15.1	15.5 x 15.5
1D/1E/1F	12.7 x 12.7	ø9.6	ø10.0
1K	15.24 x 15.24	14.3 x 14.3	14.7 x 14.7
1M	25.4 x 10.16	25.0 x 10.1	25.7 x 10.5
1N	12.7 x 12.7	ø9.8/□4.9	ø10.2/□5.1
1P/1Q/1R	15.24 x 10.16	6.5 x 12.5	7.0 x 13.0, R Max. 1.0
1S	12.7 x 10.16	ø6.5	ø7.0
1T	12.7 x 12.7	10.6 x 10.6	11.0 x 11.0
1U	12.7 x 12.7	ø10.6	ø11.0
1V (pointing outwards)	12.7 x 12.7	10.6 x 13.25	11.0 x 13.65
1X	12.7 x 12.7	9.4 x 7.4	9.8 x 7.9

*A dimension with surface mount version is min. 15.24. Depending on manufacturing technology it may be necessary either to reduce pad dimension, or to increase spacing.
In all applications the total assembly tolerance must be analysed by the user (board tolerance, front panel, assembly accuracy), to secure enough room for a free switch movement in the final product. The specifications on this page are to be considered as an aid only. MEC cannot be held responsible for the final assembly.

For updates of products and/or changes of specifications please see **www.mec.dk**

multimec® technical specifications

RoHS Compatible

	3A-3C-3E-3F Low Temperature Versions		3A-3C-3E-3F High Temperature Versions		illumec™ 4A - 4F High Temperature Versions	
	Silver	Gold	Silver	Gold	Silver	Gold
Electrical Specifications						
Contact resistance	<30m Ω - typ. 10m Ω		<30m Ω - typ. 10m Ω		<30m Ω - typ. 10 m Ω	
Insulation resistance	>10M Ω		>10M Ω		>10M Ω	
Recommended load	0.5-50mA 24VDC	0.5µ-50mA 24VDC	0.5-50mA 24VDC	0.5µ-50mA 24VDC	0.5-50mA 24VDC	0.5µ-50mA 24VDC
Contact bounce	<2mS - typically 0.5mS		<2mS - typically 0.5mS		<2mS - typically 0.5mS	
Mechanical Specifications						
Standard actuation force (switch)	3.0N typ.		3.0N typ.		3.0N typ.	
Max. actuation force without cap	100N for 10 sec.		100N for 10 sec.		100N for 10 sec.	
Key travel (switch)	1 mm		1 mm		1 mm	
Life time (switch)	>10.000.000 cycles		>10.000.000 cycles		>10.000.000 cycles	
Temperature Range						
Working temperature	Min. -40°C Max. +115°C		Min. -40°C Max. +160°C		Min. -30°C Max. +85°C*	
Storage temperature	Min. -40°C Max. +115°C		Min. -40°C Max. +160°C		Min. -30°C Max. +85°C*	
Soldering IEC 68-2-20	Wave - max. 260°C for max. 10 sec., please refer to usage guidelines. Soldering iron - max. 350°C for max. 3 sec. Flux tight.		Infrared, vapour phase, wave - max. 240°C for max. 40 sec. or max. 260°C for max. 30 sec. Soldering iron - max. 350°C for max. 3 sec. Flux tight.		Infrared, vapour phase, wave - max. 240°C for max. 40 sec. or max. 260°C for max. 30 sec. Soldering iron - max. 350°C for max. 3 sec. Flux tight.	
Environmental Endurance IEC 68-2-3						
Temperature	+40°C		+40°C		+40°C	
Humidity	93% RH		93% RH		93% RH	
Duration	56 Days		56 Days		56 Days	
Temperature Cycling IEC 68-2-14						
Temperature limit	Min. -40°C - Max. +125°C		Min. -40°C - Max. +125°C		Min. -40°C - Max. +125°C	
Number of cycles	10		10		10	
Exposure time at each temperature	30 min.		30 min.		30 min.	
Recovery time before measurements	16 hrs.		16 hrs.		16 hrs.	
Sealing IEC 529	IP-67		IP-67		IP-67	
Cleaning	Standard methods - see usage guidelines		Standard methods - see usage guidelines		Standard methods - see usage guidelines	
Vibration Test IEC 68-2-6						
Cycles					10	
Cycles time					2 hrs.	
Material Specifications - Switches						
Housing	PBT UL94VO		PPS UL94VO		PPS UL94VO	
Actuator	PBT UL94VO		PPS UL94VO		PPS UL94VO	
Sealing + spring	Silicone rubber		Silicone rubber		Silicone rubber	
Contact spring	Stainless steel + 3µAg	Stainless steel + 1µAu	Stainless steel + 3µAg	Stainless steel + 1µAu	Stainless steel + 3µAg	Stainless steel + 1µAu
Fixed contacts	SnCu + 2µNI + 3µAg	SnCu + 2µNI + 1µAu	SnCu + 2µNI + 3µAg	SnCu + 2µNI + 1µAu	SnCu + 2µNI + 3µAg	SnCu + 2µNI + 1µAu
Terminals	SnCu + 2µNI + 3µSn100	SnCu + 2µNI + 3µSn100	SnCu + 2µNI + 3µSn100	SnCu + 2µNI + 3µSn100	SnCu + 2µNI + 3µSn100	SnCu + 2µNI + 3µSn100

Material Specifications - Caps & Bezels			
Material	**Parts**	**Temp limit**	**UL rating**
ABS	1A, 1B, 1C, 1D, 1E, 1F, 1H, 1K, 1M, 1N, 1P, 1Q, 1R, 1T, 1U, 1V, 1WA, 1WD, 1WP, 1X, 1ZA, 1ZB, 1ZC.	Max. 65°C	UL94HB
Polycarbonate	All lenses, 3E coloured actuators	Max. 85°C	UL94V1
LCP	Black actuator of 3E	Max. 160°C	UL94VO
PPS	1S, 2S	Max. 160°C	UL94VO
Polyamide	Actuator of Varimec™, 1GA/1GC	Max. 160°C	UL94VO
Legends Adhesion	ISO Class: 1/ASTM Class: 4B DIN EN ISO 2409		

* LED max. working temperature

Specifications are subject to change without notice.

For updates of products and/or changes of specifications please see **www.mec.dk**

multimec® LEDs

For 3A switches		3AXXX (for 1C/1H)				2BXXX			
Colour		**B**	**G**	**Y**	**R**	**G**	**Y**	**R**	
Colur Codes		00	20	40	80	20	40	80	
Absolute Maximum Ratings	(Ta=25°C)								
Power	mW	105	100	60	100	75	60	60	
Current forward	mA	30	30	20	30	20	20	20	
Forward peak current	mA	150	120	80	120	60**	60**	60**	
Voltage reverse	V	5	5	5	5	3	3	3	
Operating temperature	°C	-40 - +85	-55 - +100			-25 - +85			
Storage temperature	°C	-40 - +85	-55 - +100			-30 - +100			
Soldering temperature	°C	260/5 sec.	260 for max. 3 sec.			260 for max. 5 sec.			
Electrical-Optical Characteristics	(Ta=25°C)								
Voltage forward	Typ. V	3.8	2.1*	2.1*	2.0*	2.1	2.1	2.0	
	Max. V	4.5	2.8*	2.8*	2.8*	3.0	3.0	3.0	
Current reverse (V_R = 5V)	µA	10	100	100	100	10	10	10	
Wave length	nm	466	565	585	630	563	585	650	
Spread	Δnm	30	30	35	40	40	40	40	
Spread angle	degree	40	90	90	90	45	45	45	
Luminous Intensity	Min. mcd	4	0.7	1.7	1.1	9.0	5.6	5.6	
	Typ. mcd	10	2.5	5.6	3.7	25	16	16	
Orientation	The longer pin is the anode, the shorter is the cathode								

*/$_F$ = 20mA, **Pulse width 1ms Duty cycle 1:5

For 3F switches		3FXXX (for 1E-1F-1N-1Q-1R-1S-1X)							3FXXX (for 1K-1T-1U-1V-1W-1WD)		
Colour		**B**	**G**	**Y**	**R**	**G/Y**	**R/G**	**R/Y**	**G**	**Y**	**R**
Colur Codes		00	20	40	80	2040	8020	8040	23	45	88
Absolute Maximum Ratings	(Ta=25°C)										
Power	mW	105	70	60	60	120	120	120	150	130	300
Current forward	mA	30	20	20	20	25	25	25	40	40	90
Forward peak current	mA	200	60**	60**	60**	150	150	150	500	500	1000
Voltage reverse	V	5	3	3	3	5	5	5	12	12	5
Operating temperature	°C	-25 - +85				-40 - +85			-55 - +100		
Storage temperature	°C	-30 - +100				-40 - +85			-55 - +100		
Soldering temperature	°C	260 for max. 5 sec.				260 for max. 2 sec.			300 for max. 3 sec.		
Electrical-Optical Characteristics	(Ta=25°C)										
Voltage Forward	Typ. V	2.1	2.1	2.1	2.0	2.1	2.1	2.1	2.1*	2.3***	2.4***
	Max. V	2.8	3.0	3.0	3.0	2.8	2.8	2.8	2.5*	2.5***	3.8***
Current reverse (V_R = 5V)	µA	2	10	10	10	2	2	2	10	10	10
Wave length	nm	460	563	585	650	565/590	625/565	625/590	570	587	635
Spread	Δnm	40	40	40	40	35	35	35	25	45	45
Spread angle	degree	20	45	45	45	60	60	60	80	90	55
Luminous Intensity	Min. mcd	20	9.0	5.6	5.6	8	8	8	71****	71****	100****
	Typ. mcd	25	25	16	16	25	25	25	112****	112****	160****
Orientation	The longer pin is the anode, the shorter is the cathode. For bicolor LEDs the anode for the first colour (ex. 2080) is the longer pin.										

***/$_F$ = 50mA, ****Luminous Flux mlm

For 4A/4F switches		illumec™ LEDs specifications				
Colour		**B**	**G**	**Y**	**W**	**R**
Colur Codes		01	22	42	61	82
Absolute Maximum Ratings	(Ta=25°C)					
Power	mW	60	65	65	80	65
Current forward	mA	20	25	25	15	25
Forward peak current	mA	150	150	100	200	100
Voltage reverse	V	5	12	12	5	12
Operating temperature	°C	-30 - +85				
Storage temperature	°C	-30 - +85				
Soldering temperature	°C	245 for max. 10 sec.				
Electrical-Optical Characteristics	(Ta=25°C)					
Voltage forward	Typ. V	3.35	2.2	2	3.05	2
	Max. V	3.5	2.5	2.5	3.2	2.5
Current reverse (V_R = 5V)	µA	0.01	0.02	0.01	0.01	0.01
Wave length	nm	470	570	588	n.a.	633
Spread	Δnm	n.a.	30	16	n.a.	16
Spread angle	degree	145	160	160	138	160
Luminous Intensity	Min. mcd	30	28	112	28	112
	Typ. mcd	35	70	150	35	150
Optical Intensity	Lm/w	4			2.5	

B= Blue, G= Green, Y= Yellow, R= Red, W= White, G/Y= Green/Yellow, R/G= Red/Green, R/Y= Red/Yellow
Specifications are subject to change without notice.

For updates of products and/or changes of specifications please see **www.mec.dk**

multimec® Solid Colours

No. Colour RAL Code	00 blue 5012	02 green 6018	03 grey 7004	04 yellow 1023	06 white 9010	08 red 3000	09 black 9004

No. Colour RAL Code	30 ultra blue 5002	32 mint green 6029	33 tele grey 7046	34 melon 1028	38 noble red 3002	40 dusty blue 5014	42 aqua blue 5021

Metallic Colors

No. Colour RAL Code	50 dark blue No RAL Code	53 light grey No RAL Code	57 dark grey No RAL Code	58 bordeaux No RAL Code

Cap		00	02	03	04	06	08	09	30	32	33	34	38	40	42	50	53	57	58
1A		X	X	X	X	X	X	X	X	X	X	X	X	X	X	X	X	X	X
1B		X	X	X	X	X	X	X	X	X	X	X	X	X	X	X	X	X	X
1C		X	X	X	X	X	X	X											
1D		X	X	X	X	X	X	X	X	X	X	X	X	X	X	X	X	X	X
1E		X	X	X	X	X	X	X											
1F		X	X	X	X	X	X	X											
1H		X	X	X	X	X	X	X											
1K		X	X	X	X	X	X	X											
1M		X	X	X	X	X	X	X											
1N		X		X	X		X	X											
1P		X	X	X	X	X	X	X											
1Q		X		X			X	X											
1R		X		X			X	X											
1S								X											
1T		X		X			X	X											
1U		X		X			X	X											
1V		X		X			X	X											
1WA/1WD/1WP		X		X			X	X	X					X	X		X	X	
1X		X	X	X	X	X	X	X	X	X	X	X	X	X	X	X	X	X	X
1ZA				X		X		X	X					X	X	X	X	X	X
1ZB				X		X		X	X					X	X	X	X	X	X
1ZC				X		X		X	X					X	X	X	X	X	X

The RAL Codes mentioned are the codes nearest to the solid colours in the multimec® range.

For updates of products and/or changes of specifications please see **www.mec.dk**

unimec™ 16324 - 16326



Technical Data

- Max. 250mA/120V/9W AC/6W DC
- 2 pole
- momentary or alternate
- 8 contact functions
- temperature range:
  low temp: -40/+75°C
  high temp: -40/+160°C
- through-hole version

Dimensions

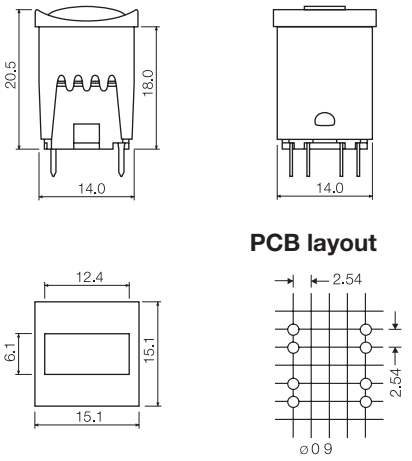

Dimensions (w/LED)

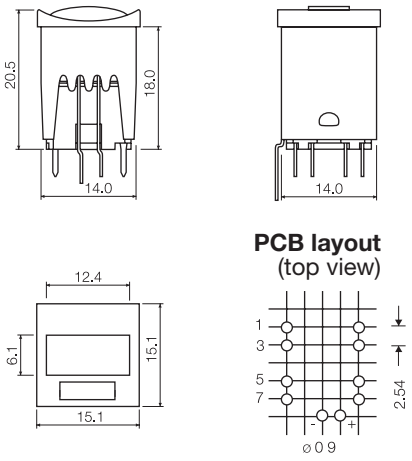

Dimensions (w/2 LEDs)

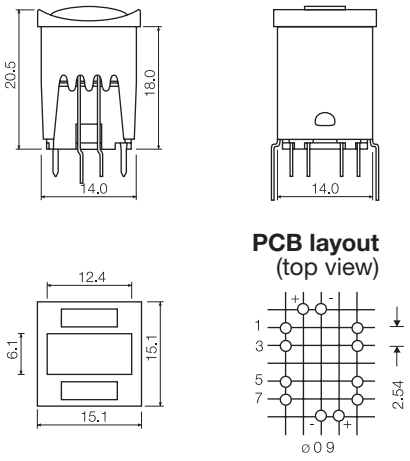

How to order

1 5			+	1 6 2 7 0	+	1 6 3 0 0			+	1 6 3 2 4		
Switch				Extender		Cap				Bezel		

Switch
15501 mom. silver
15551 alt. silver
15502 mom. gold
15552 alt. gold
15500 silent silver
15401 mom. silver high temp.
15402 mom. gold high temp.
15420 silent gold high temp.
15451 alt. silver high temp.

Cap
00 blue
01 brown
02 green
03 grey
04 yellow
05 golden
06 white
07 orange
08 red
09 black
30 ultra blue
40 dusty blue
42 aqua blue
32 mint green
33 tele grey
34 melon
38 noble red
50 metal dark blue
53 metal light grey
57 metal dark grey
58 metal bordeaux

Bezel
01 brown
03 grey
06 white
09 black

1 5			+	1 6 2 7 0	+	1 6 3 0 0			+							+	1 6 3 2 7		+	1 6 9 2 2		
Switch				Extender		Cap				16325							Lens			LED		

Lens
02 green
04 yellow
08 red

LED
02 green
04 yellow
08 red

16326

Lens 16327
2 required

LED 16922
2 required

Ordering example: 15501 + 16270 + 1630008 + 1632509 + 1632708 + 1692208

For updates of products and/or changes of specifications please see **www.mec.dk**

unimec™ 16310 - 16315



Technical Data

- Max. 250mA/120V/9W AC/6W DC
- 2 pole
- momentary or alternate
- 8 contact functions
- temperature range:
  low temp: -40/+75°C
  high temp: -40/+160°C
- through-hole version

Dimensions (through-hole)

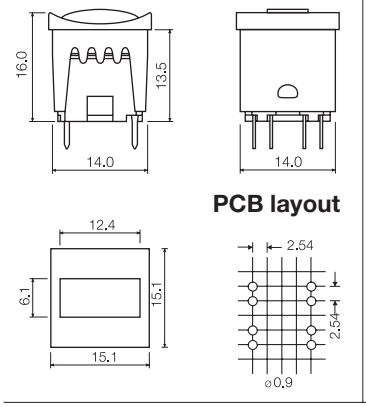

Dimensions (w/LED)

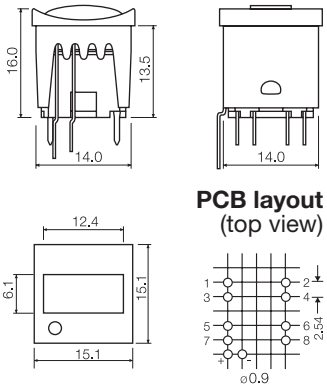

Dimensions (w/LED)

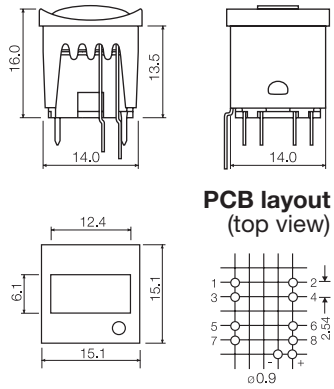

Dimensions (w/4 LEDs)

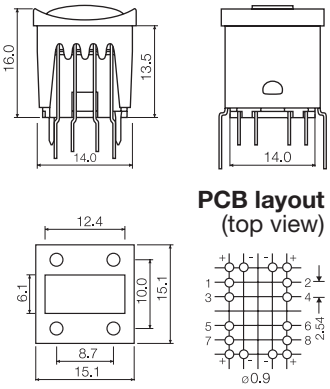

How to order



1 5 + **1 6 3 0 0** + **1 6 3 1 0**

Switch
15501 mom. silver
15551 alt. silver
15502 mom. gold
15552 alt. gold
15500 silent silver
15401 mom. silver high temp.
15402 mom. gold high temp.
15420 silent gold high temp.
15451 alt. silver high temp.

Cap



00 blue
01 brown
02 green
03 grey
04 yellow
05 golden
06 white
07 orange
08 red
09 black

Bezel



00 blue
01 brown
02 green
03 grey
04 yellow
05 golden
06 white
07 orange
08 red
09 black

For 16300 and 16310 only
30 ultra blue
40 dusty blue
42 aqua blue
32 mint green
33 tele grey
34 melon
38 noble red
50 metal dark blue
53 metal light grey
57 metal dark grey
58 metal bordeaux



1 5 + **1 6 3 0 0** + [ ] + **1 6 9 2 1**

Switch

Cap



Bezel 16311



LED 16921 **02** green
04 yellow
08 red



[ ] + **1 6 9 2 0**

Bezel 16312



LED 16920 **02** green
04 yellow
08 red



Bezel 16314



LED 16920 1 required
LED 16921 1 required

Bezel 16315



LED 16920 2 required
LED 16921 2 required

Ordering example: 15501 + 1630003 + 1631408 + 1692008 + 1692108

For updates of products and/or changes of specifications please see **www.mec.dk**

unimec™ 16300/16700/16800

Technical Data

- Max. 250mA/120V/9W AC/6W DC
- 2 pole
- momentary or alternate
- 8 contact functions
- temperature range:
  low temp: -40/+75°C
  high temp: -40/+160°C
- through-hole version



Dimensions 16300

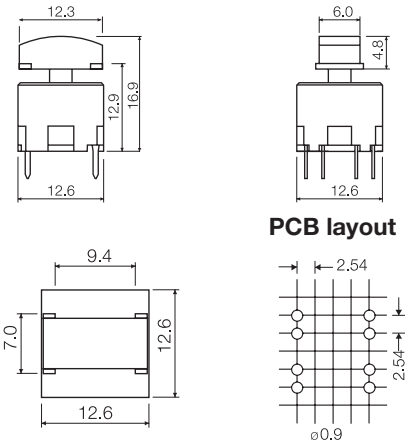

Dimensions 16700

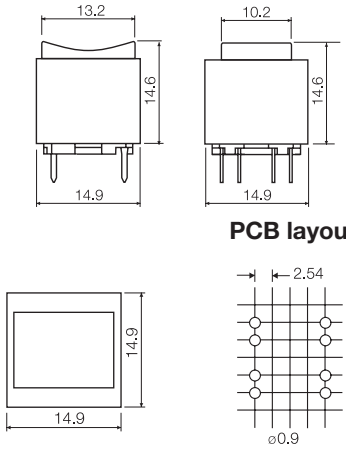

Dimensions 16800

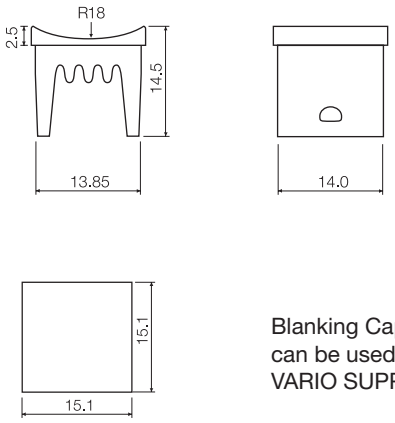

Blanking Cap can be used with VARIO SUPPORT

How to order



1 5 + **1 6 3 0 0**

Switch
15501 mom. silver
15551 alt. silver
15502 mom. gold
15552 alt. gold
15500 silent silver
15401 mom. silver high temp.
15402 mom. gold high temp.
15420 silent gold high temp.
15451 alt. silver high temp.

Cap



00 blue
01 brown
02 green
03 grey
04 yellow
05 golden
06 white
07 orange
08 red
09 black

30 ultra blue
40 dusty blue
42 aqua blue
32 mint green
33 tele grey
34 melon
38 noble red

50 metal dark blue
53 metal light grey
57 metal dark grey
58 metal bordeaux



1 5 + **1 6 7 0 0**

Switch

Cap



00 blue
02 green
03 grey
04 yellow

06 white
08 red
09 black

1 6 8 0 0

Blanking Cap



00 blue
01 brown
02 green
03 grey
04 yellow
05 golden

06 white
07 orange
08 red
09 black

11 transparent
12 transparent green
14 transparent yellow
18 transparent red

Ordering example: 15551 + 1670009

For updates of products and/or changes of specifications please see **www.mec.dk**

unimec™ Vario Support

For all types of UNIMEC™ switches with bezels - 16310 - 16315 and 16324 - 16326



16.410 (1x1)



16.411 (1x2)



16.412 (1x3)



16.413 (1x4)

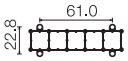

16.414 (1x5)

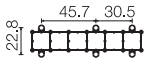

16.415 (1x6)

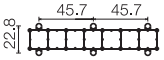

16.416 (1x7)

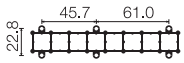

16.417 (1x8)

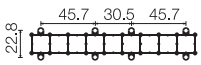

16.418 (1x9)

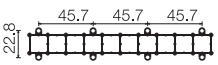

16.419 (1x10)

16.420 (2x2)



16.421 (2x3)

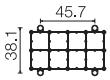

16.422 (2x4)

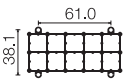

16.423 (2x5)

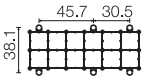

16.424 (2x6)

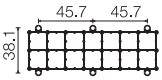

16.425 (2x7)

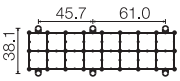

16.426 (2x8)

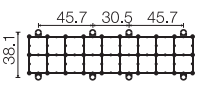

16.427 (2x9)

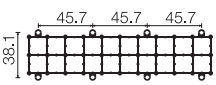

16.428 (2x10)

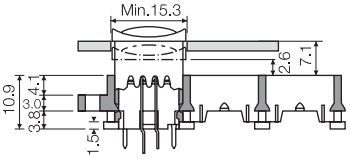

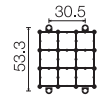

16.430 (3x3)

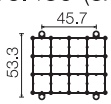

16.431 (3x4)

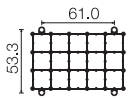

16.432 (3x5)

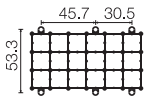

16.433 (3x6)

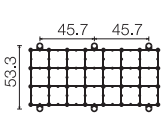

16.434 (3x7)

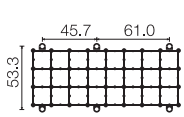

16.435 (3x8)

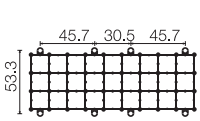

16.436 (3x9)

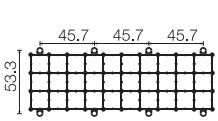

16.437 (3x10)

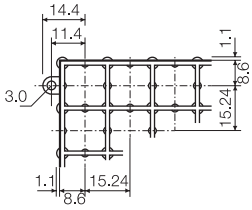

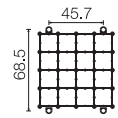

16.440 (4x4)

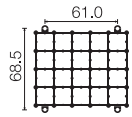

16.441 (4x5)

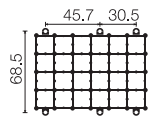

16.442 (4x6)

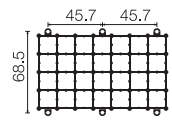

16.443 (4x7)

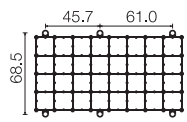

16.444 (4x8)

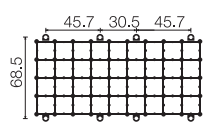

16.445 (4x9)

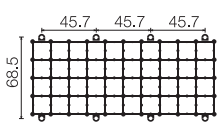

16.446 (4x10)

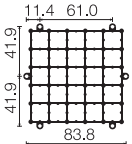

16.450 (5x5)

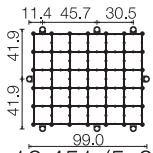

16.451 (5x6)

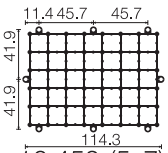

16.452 (5x7)

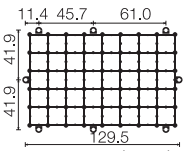

16.453 (5x8)

16.454 (5x9)

16.455 (5x10)

16.500 (10x10)

16.460 (6x6)

16.461 (6x7)

16.462 (6x8)

16.463 (6x9)

16.464 (6x10)

For updates of products and/or changes of specifications please see **www.mec.dk**

unimec™ Legends



All standard legends are white on black caps.
The size of the legends listed may not correspond to the actual size. Please ask your local distributor, if you do not find what you need on the list. New legends may have been added after this catalogue was printed.
Custom legends and other colour combinations are available, please contact your local distributor.

Standard Keycap Legends

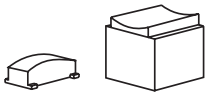
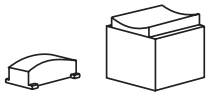
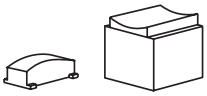

LEGEND	Part no. 18_	Part no. 18_	LEGEND	Part no. 18_	Part no. 18_	LEGEND	Part no. 18_	Part no. 18_
0	000	200	A	010	210	ON/OFF	017	217
1	001	201	B	011	211	STOP	018	218
2	002	202	C	012	212	START	031	231
3	003	203	D	013	213	CLEAR	036	236
4	004	204	E	014	214	LOAD	037	237
5	005	205	F	015	215	RESET	038	238
6	006	206	G	063	263	CR	043	243
7	007	207	H	064	264	MANUAL	044	244
8	008	208	I	065	265	END	047	247
9	009	209	J	066	266	CANCEL	048	248
10	020	220	K	067	267	CTRL	050	250
11	021	221	L	068	268	ESC	051	251
12	022	222	M	069	269	DSP	053	253
13	023	223	N	070	270	ENTER	105	305
14	024	224	P	072	272	SHIFT	106	306
15	025	225	S	075	275	ON	116	316
16	026	226	T	076	276	OFF	117	317
			U	077	277			
			V	078	278			
			W	079	279			
			#	107	307			
			*	019	219			
			⌑	016	216			
			→	033	233			
			←	133	333			
			↑	034	234			
			↓	134	334			
			↵	135	335			
			↑↓	115	315			
			←→	041	241			
			+	054	254			
			−	059	259			
			•	056	256			
			:	055	255			

For updates of products and/or changes of specifications please see **www.mec.dk**

unimec™ switches with multimec® keycaps

Selection guide

A 16250 extender is needed when mounting multimec® keycaps on unimec™ switches

Cap	1D	1E 1F	1P	1Q 1R
Dimensions	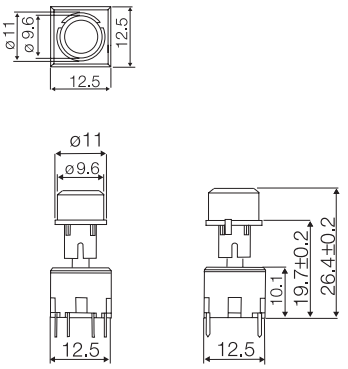	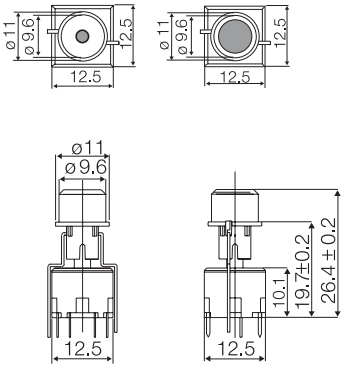	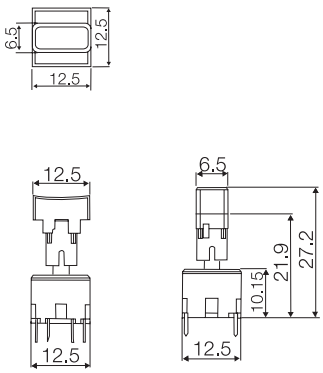	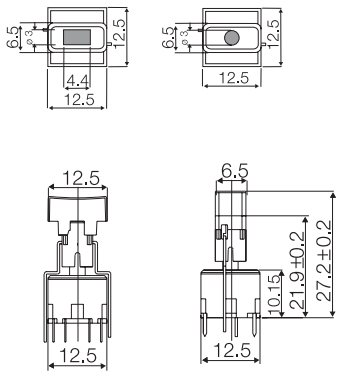
LED		**16923XX** **00** blue **20** green **40** yellow **80** red		**16923XX** **00** blue **20** green **40** yellow **80** red
Cap	1S	1S illuminated	1S + 2S	1K 1K illuminated
Dimensions	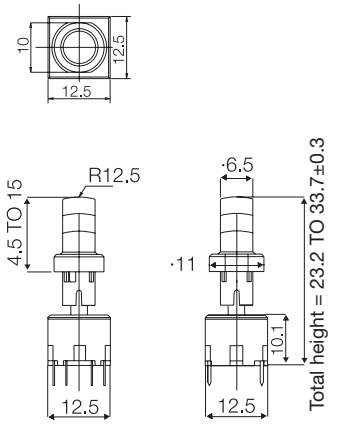	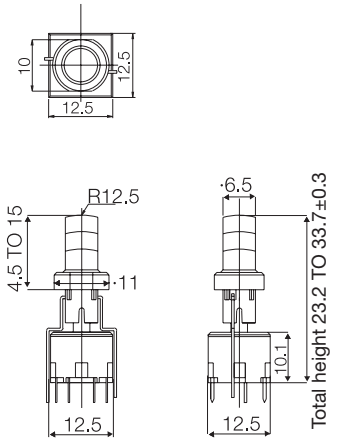	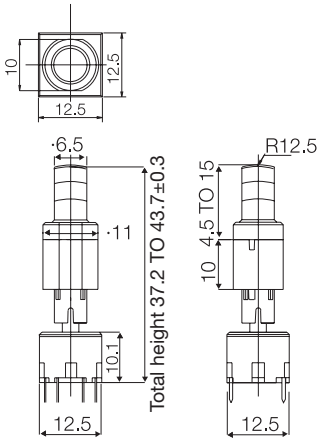	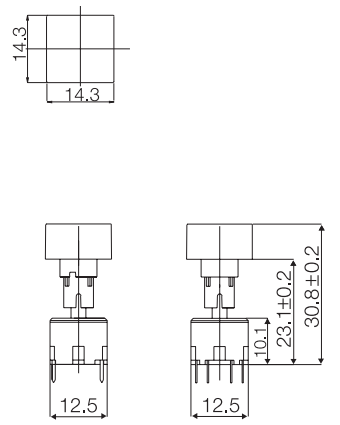
LED		**16923XX** **00** blue **20** green **40** yellow **80** red	**16923XX** **00** blue **20** green **40** yellow **80** red	**16924XX** **23** green **45** yellow **88** red

For specific dimensions, color codes, how to order and other information please refer to the pages with the keycaps on multimec® switches. For technical information on the unimec™ basic switches please see technical specifications or go to our website www.mec.dk where you will find a page for each option.
The multimec® keycaps 1N, 1T, 1U, 1V, 1WA, 1WD, 1WP and 1X can also be used on unimec™ switches. Please ask for technical drawings on dimensions.

For updates of products and/or changes of specifications please see **www.mec.dk**

unimec™ basic switch modules

Basic module applies to all versions

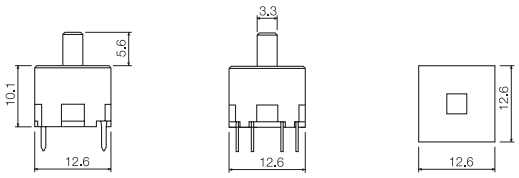

Low temp.

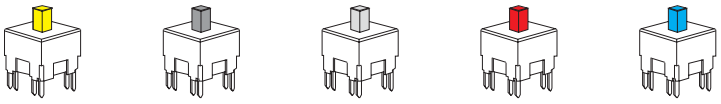

15.500 **15.501** **15.502** **15.551** **15.552**

High temp.

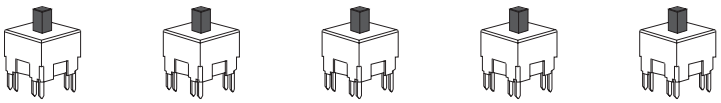

15.420 **H** | **15.401** **E** | **15.402** **F** | **15.451** **I** | **15.452** **J**

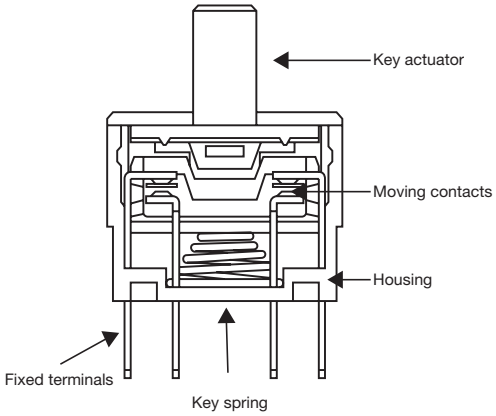

Part no:

1	5			

Temperature:
5: low temp.
4: high temp.

Switch function:
0: momentary
5: alternate

Terminal
1: silver
2: gold
0: quiet version, silver

PCB Mounting Hole Dimensions Basic Switch

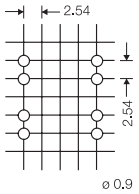

Circuit diagram (topview)

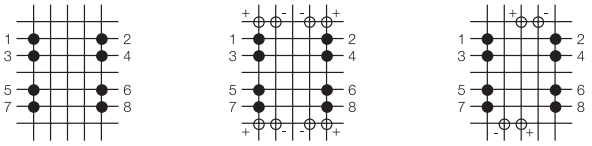

Without LED | With round LED 16920 and 16921 | With rect. LED 16922

PCB Mounting Hole Dimensions (w/Extender 16250)

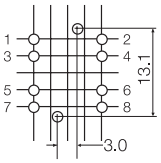

With LED 16923 and 16924

Functional diagram

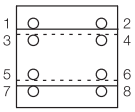

—— up
---- down

Wiring Diagram

Select the contact function you desire - and design your PC board accordingly

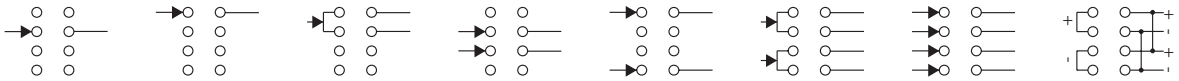

1 make contact | 1 break contact | 1 change over contact | 2 make contacts | 2 break contacts | 2 change over contacts | 2 make and 2 break | reverse polarity

How to assemble

unimec™
15XXX + 16300 + 16310

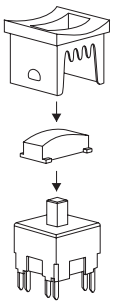

unimec™
15XXX + 16270 + 16300 + 16324

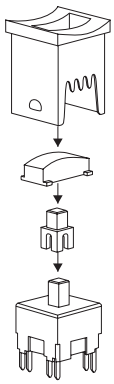

Operating Force
(Typical example)

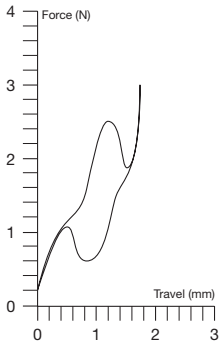

For updates of products and/or changes of specifications please see **www.mec.dk**

unimec™ technical specifications

RoHS Compatible

	RB Low Temperature Versions Silver	RB Low Temperature Versions Gold	RA High Temperature Versions Silver	RA High Temperature Versions Gold
Electrical Specifications				
Contact resistance	Max. 100 m Ω (initially)		Max. 100 m Ω (initially)	
Insulation resistance	>10 M Ω		>10 M Ω	
Recommended load	Min. 0.5 mA	Min. 0.5µ A	Min. 0.5 mA	Min. 0.5µ A
	Max. 250 mA - 120 V - 9W AC - 6W DC		Max. 250 mA - 120 V - 9W AC - 6W DC	
Max. current in non switching state	0.5 A		0.5 A	
Contact bounce	Max. 10 ms		Max. 10 ms	
Dielectric strength between adjacent contacts	1000 V for 2 min.		1000 V for 2 min.	
Insulation resistance between adjacent contacts	5 X 10^{13} Ω		5 X 10^{13} Ω	
Capacitance between adjacent contacts	0.5 pF		0.5 pF	
Mechanical Specifications				
Standard actuation force (switch)	typ 2.5N		typ 2.5N	
Max. actuation force without cap	100N for 10 sec.		100N for 10 sec.	
Key travel (switch)	1.8 mm		1.8 mm	
Life time	Momentary 1.500.000 cycles		Momentary >10.000.000 cycles	
	Alternate 500.000 cycles		Alternate 5.000.000 cycles	
Temperature Range				
Working temperature	Min. -40°C Max. +75°C		Min. -40°C Max. +160°C	
Storage temperature	Min. -65°C Max. +85°C		Min. -65°C Max. +160°C	
Soldering IEC 68-2-20	Wave - max 260°C for max. 10 sec., please refer to usage guidelines			
	Soldering iron - max. 350°C for max. 3 sec. Flux tight.			
Environmental Endurance IEC 68-2-3				
Temperature	+40°C		+40°C	
Humidity	93% RH		93% RH	
Duration	56 Days		56 Days	
Sealing IEC 529	IP-54		IP-54	
Cleaning	Standard methods such as water and soap (not immersed)		Standard methods such as water and soap (not immersed)	
Material Specifications - Switches				
Housing and actuator	Glass fiber filled Polycarbonate UL94V1		LCP UL94V0	
Switch spring	Stainless steel		Stainless steel	
Key spring	Stainless steel		Stainless steel	
Latch pin	Stainless steel		Stainless steel	
Fixed contact	SnCu + 2µNi + 3µAg	SnCu + 2µNi + 3µAu	SnCu + 2µNi + 3µAg	SnCu + 2µNi + 3µAu
Moving contact	Stainless steel + 3µAg	Stainless steel + 3µAg+1µAu	Stainless steel +3µAg	Stainless steel + 3µAg+1µAu
Terminals	SnCu + 2µNi + 3µSn100		SnCu + 2µNi + 3µSn100	
Contact lubricant	Special protective lubricant Klüber Barrierta I EL Fluid		Special protective lubricant Klüber Barrierta I EL Fluid	
Material Specifications - All Caps & Bezels	ABS (standard) UL94HB		ABS (standard) UL94HB	
Temperature limit	Max. +65°C		Max. +65°C	
Tampon Printing	According to ISO Class: 1/ASTM Class.: 4B		According to ISO Class: 1/ASTM Class.: 4B	

unimec™ LEDs

Part Nos.		**16920/16921**			**16922**			**16923**			**16924**		
Colour (G= Green, Y= Yellow, R= Red)		**G**	**Y**	**R**	**G**	**Y**	**R**	**G**	**Y**	**R**	**G**	**Y**	**R**
Colur Codes		02	04	08	02	04	08	20	40	80	23	45	88
Absolute Maximum Ratings	(Ta=25°C)												
Power	mW	100	100	100	135	135	135	70	60	60	150	130	300
Current forward	mA	30	30	30	30	30	30	20	20	20	40	40	90
Forward peak current	mA	50	50	50	90	90	90	60**	60**	60**	500	500	1000
Voltage reverse	V	5	5	5	5	5	5	3	3	3	12	12	5
Operating temperature	°C	-25 - +100			-55 - +100			-25 - +85			-55 - +100		
Storage temperature	°C	-25 - +100			-55 - +100			-30 - +100			-55 - +100		
Soldering temperature	°C	+245 for max. 3 sec.			+300 for max. 3 sec.			+260 for max. 5 sec.			+300 for max. 3 sec.		
Electrical-Optical Characteristics	(Ta=25°C)												
Voltage Forward	Typ. V	2.0	2.0	2.0	2.1	2.2	2.3	2.1	2.1	2.0	2.1*	2.3***	2.4***
	Max. V	3.0	3.0	3.0	3.0	3.0	3.0	3.0	3.0	3.0	2.5*	2.5***	3.8***
Current reverse	µA	100	100	100	100	100	100	10	10	10	10	10	10
Wave length	nm	560	590	660	565	585	635	563	585	650	570	587	635
Spread	Ønm	10	10	10	10	10	10	40	40	40	25	45	45
Spread angle	degree	20	20	20	45	45	45	45	45	45	80	90	55
Luminous Intensity	Min. mcd	1	1	0.8	1.5	2.5	2.5	9.0	5.6	5.6	71****	71****	100****
	Typ. mcd	2	3	1.6	2.5	3.0	5.0	25	16	16	112****	112****	160****
Orientation	The longer pin is the anode, the shorter is the cathode.												

*/$_F$ = 20mA, **Pulse width 1ms Duty cycle 1:5, ***/F= 50mA, ****Luminous Flux mlm

Specifications are subject to change without notice.

For updates of products and/or changes of specifications please see **www.mec.dk**

mec Usage Guidelines

How to get the best results with mec switches

These guidelines are offered to users of mec switches as an aid to ensure successful and reliable switch operation.

Temperature

Both Unimec™ and Multimec® switches are produced in standard and high temperature versions. Please see the technical specifications for details on operating and storage temperatures and soldering guidelines to make sure you select the best switch for your application. When wave soldering is taking place, mec strongly recommend that the temperature profile is analyzed and compared with the temperature rating of the switch. In case of doubt always select the high temperature versions Unimec™ 154XX and Multimec® 3XXHX. It is also important to monitor the accumulated heat build up from both the pre-heat zones and the solder zone.

Most standard accessories for both Unimec™ and Multimec® switches are made from ABS plastic with a maximum operating temperature of 65°C. It is strongly recommended that accessories are mounted after soldering of the switch. If this is not possible care must be taken not to overheat the accessories during the soldering process. Actuators for the 3EXX9, the 1S09 and Varimec™ caps are, however, made of high temperature materials and will meet the same temperature specifications as the high temperature switches.
For accessories made from other plastic materials please see Multimec and Unimec technical specifications.

LEDs have their own temperature specifications. When fitted in a high temperature switch the LED will determine the max. operating temperature, i.e. 3FTH923 has an upper temperature limit of 85°C – not 160°C! This also applies to the 4A and 4F switches.

Mounting and Dismounting

If switches are to be mounted in rows it is essential that the recommendations regarding spacing are followed. PC board thickness should be 1.2 to 1.6 mm and terminal hole diameter should be 0.9 mm.

All Unimec™ and Multimec® caps and bezels are easily snapped onto the switch modules and can be changed at a later time with the exception of the Unimec™ 16.700 cap. The same applies to the 3E caps/actuators. Once these caps are installed they are not designed to be removed. To do so may cause damage to the switch and the PC board if not done very carefully. If the 16.300 or 16.700 cap must be removed from a Unimec™ alternate action switch, make sure that the switch actuator is in the released, upper position before attempting to remove the cap. This will prevent possible damage to the internal latching pin.

Care must be taken when inserting the 3FT switch and LED assembly into the PC board. Do not press direct on the LED. This will force the LED down into the actuator and risks to cause the switch contacts to remain in the closed position. To correct the fault, the LED must be raised slightly and centered in the actuator to assure unrestricted movement of the actuator. A mounting tool is available for Multimec® switches.

Soldering and Cleaning Unimec™

Most assembly and field problems experienced by users of unsealed switches are caused by the contamination of the contacts during soldering and cleaning.

Contact contamination may be recognized by an increase in contact resistance and possible intermittent operation of the switch, especially in low power applications. Care must be taken not to submerge the switch in cleaning agents or spray the switch during cleaning. The switch must be protected at all times to prevent contamination by flux or cleaning liquids.
For Unimec™ alternate versions we recommend to leave the actuator in the released upper position during soldering. This makes the switch more resistent to overheating.

Soldering and Cleaning Multimec®

Multimec® switches are fully sealed to IP67 specifications to prevent solder flux and aqueous or solvent based cleaning solutions from entering the switch and contaminating the contacts. The switches can be placed on the PC board with other components and wave soldered. Multimec® offers a high level of sealing, however, with aqueous solvent solutions care must be taken to avoid the worst case situation with water jets, complete immersion into a liquid with a temperature below the board or surface tension reducing additives.
Recommended cleaning methods are demineralized water. Any surface tensions reducing agents, such as soap, must not be used as they risk causing a potential leakage of the switch.

Soldering - Through Hole Versions

Hand soldering: Max 350°C for max. 3 sec., this applies for both low temperature and high temperature versions.
Wave soldering: Heat built up in the switch during pre-heating and soldering must not exceed the maximum operating temperature of the switch. If, for some reason, a high pre-heating temperature is required, mec recommend the high temperature switches. In any case peak temperature must not exceed 260°C, and soldering time is max. 10 sec.

Soldering - Surface Mount Versions

For all methods – infrared, convection and vapour phase. The upper limit 260°C/30 sec. must be observed. The soldering temperature profile must have moderate temperature gradients.

RoHS Compliance

As of 1 July 2006 mec has completed the conversion to RoHS compliance. A separate part number system assures that there will not be any risk for mixing products in the supply chain. For more info please see our homepage www.mec.dk

General Temperature Limits:

Low Temperature	115°C
High Temperature	160°C
LEDs	85/100°C
Accessories	65/85/160°C

Packaging

Unimec™ and Multimec® switches are packed in rigid tubes of 50 pieces each.
A box contains 1.000 pcs.
The surface mount versions of Multimec® switches with a height up to 12.5 mm can also be delivered on tape/reel. Each reel contains 250/500 pcs.

For updates of products and/or changes of specifications please see **www.mec.dk**

Custom Products from Conception to Completion

mec are mastering all technologies for the design and manufacture of switches and accessories. The wide range of mec standard products is well known world wide, but also many custom solutions have been created. mec offer to be your partner from conception to completion. Our R/D engineers generate computer animated solutions, rapid prototypes and manage the whole industrialisation process.

We welcome any custom requirement.



- **Navigation module**
- **Cap with concave surface**
- **Fluorescent legends**
- **Different actuation forces**
- **Reverse printed legend on translucent cap**
- **Quiet switches with and without tactile feeling**
- **Cap colours matched to customer's request**
- **Right angle switches with integrated illumination**
- **Customer specified ultra bright LED**
- **Ultra high temperature Cap**

Please consult factory with your custom requirement.

For updates of products and/or changes of specifications please see **www.mec.dk**

switches

MANUFACTURER

mec a/s
Industriparken 23
DK-2750 Ballerup
Denmark

Phone: (+45) 44 97 33 66
Fax: (+45) 44 68 15 14
E-mail: danmec@mec.dk
Web: www.mec.dk

www.essens.info





DISTRIBUTOR

Made in Denmark © mec a/s 2006