E21211

Mounting set for photoelectric sensors

O5 MOUNTING BRACKET 200

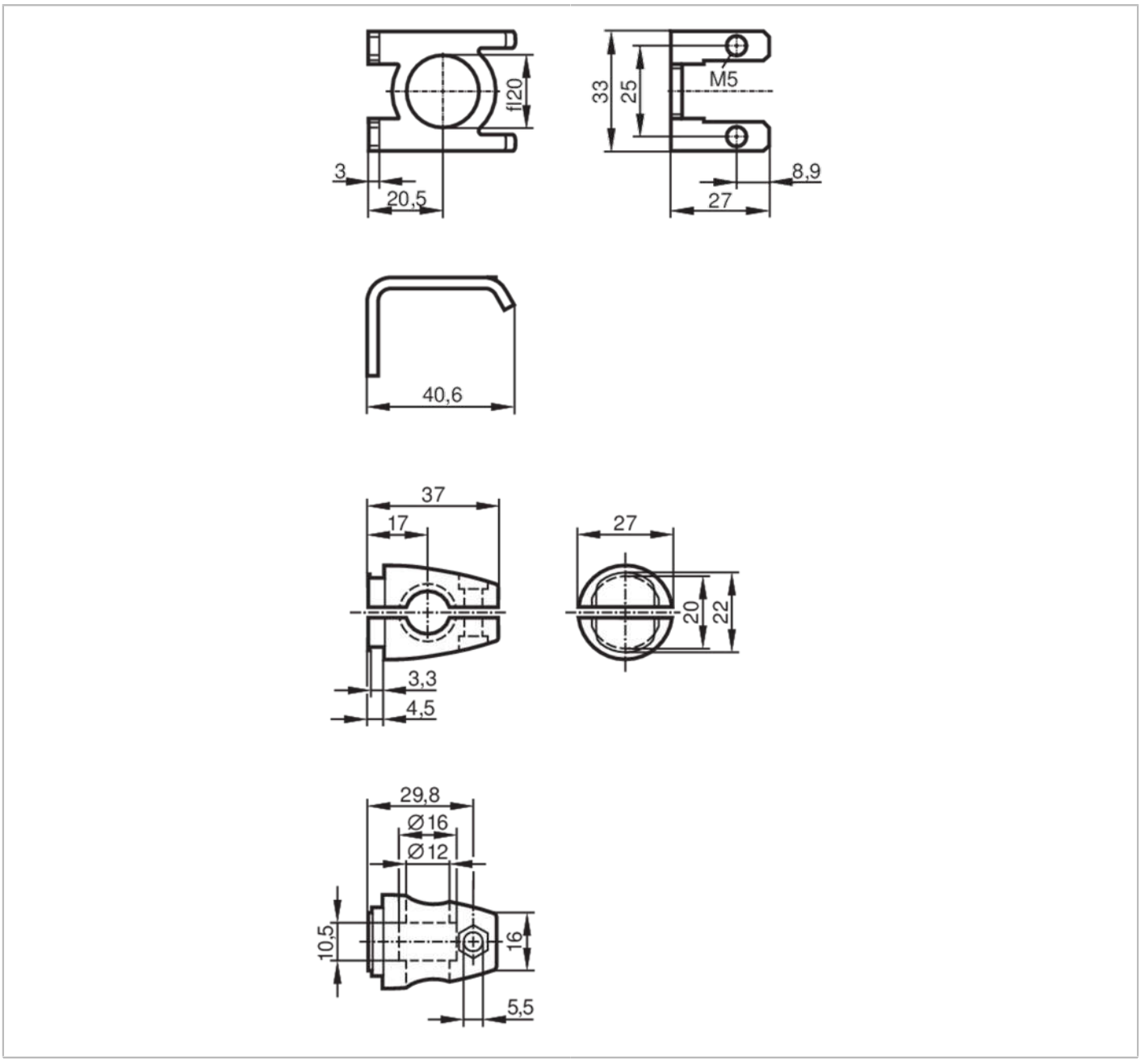

Application		
Design		clamp mounting
Mechanical data		
Weight	[g]	105.5
Type of mounting		Mounting rod; (Ø 12 mm)
Materials		stainless steel (1.4571/316Ti); Clamp: diecast zinc
Accessories		
Items supplied		cylinder screws: 2 x M5 x 8
Remarks		
Pack quantity		1 pcs.